US009204962B2

(12) **United States Patent**
Silvestrini

(10) **Patent No.: US 9,204,962 B2**
(45) **Date of Patent: Dec. 8, 2015**

(54) **IN SITU ADJUSTABLE OPTICAL MASK**

(71) Applicant: **AcuFocus, Inc.**, Irvine, CA (US)

(72) Inventor: **Thomas A. Silvestrini**, Alamo, CA (US)

(73) Assignee: **AcuFocus, Inc.**, Irvine, CA (US)

(*) Notice: Subject to any disclaimer, the term of this patent is extended or adjusted under 35 U.S.C. 154(b) by 71 days.

(21) Appl. No.: **13/802,340**

(22) Filed: **Mar. 13, 2013**

(65) **Prior Publication Data**

US 2014/0277432 A1 Sep. 18, 2014

(51) **Int. Cl.**

A61F 2/16	(2006.01)
A61F 2/14	(2006.01)
G02F 1/15	(2006.01)
G03C 1/73	(2006.01)

(52) **U.S. Cl.**

CPC ***A61F 2/1659*** (2013.01); ***A61F 2/14*** (2013.01); ***G02F 1/15*** (2013.01); ***G03C 1/733*** (2013.01)

(58) **Field of Classification Search**

USPC 623/6.17, 6.58; 351/159.61, 159.24

See application file for complete search history.

(56) **References Cited**

U.S. PATENT DOCUMENTS

564,518	A	7/1896	Heilborn
1,034,516	A	8/1912	Samberg
1,206,132	A	11/1916	Otte
1,959,915	A	5/1934	Guthrie
2,129,305	A	9/1938	Feinbloom
2,350,421	A	6/1944	Schoder et al.
2,470,927	A	5/1949	Hale, Jr.
2,714,721	A	8/1955	Stone, Jr.
3,034,403	A	5/1962	Neefe
3,074,407	A	1/1963	Moon et al.
3,270,099	A	8/1966	Camp
3,339,997	A	9/1967	Wesley
3,392,727	A	7/1968	Hanlon
D212,868	S	12/1968	Olson
3,458,870	A	8/1969	Stone, Jr.
3,507,566	A	4/1970	Knapp

(Continued)

FOREIGN PATENT DOCUMENTS

AR	241 330	12/1992
AR	241 830	12/1992

(Continued)

OTHER PUBLICATIONS

Accomodation and acuity under night-driving illumination levels. Arumi et al. Ophthal. Physiol. Opt. vol. 17, No. 4, pp. 291-299, 1997.

(Continued)

Primary Examiner — Thomas J Sweet

Assistant Examiner — Tiffany Shipmon

(74) *Attorney, Agent, or Firm* — Knobbe Martens Olson & Bear LLP

(57) **ABSTRACT**

Implantable corneal and intraocular implants such as a mask are provided. The mask can improve the vision of a patient, such as by being configured to increase the depth of focus of an eye of a patient. The mask can include an aperture configured to transmit along an optical axis substantially all visible incident light. The mask can further include a transition portion that surrounds at least a portion of the aperture. This portion can be configured to switch from one level of opacity to another level of opacity through the use of a controllably variable absorbance feature such as a switchable photochromic chromophore within a polymer matrix.

21 Claims, 12 Drawing Sheets

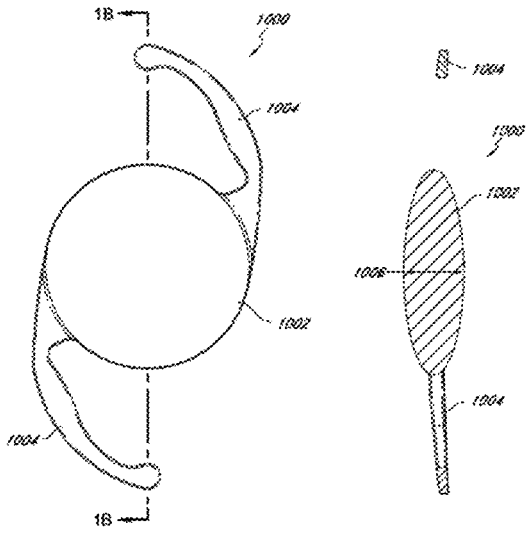

(56) **References Cited**

U.S. PATENT DOCUMENTS

3,536,386	A	10/1970	Spivack	
3,578,850	A	5/1971	Grant	
3,600,098	A	8/1971	Mohrman	
3,726,587	A	4/1973	Kendall	
3,776,230	A	12/1973	Neefe	
3,794,414	A	2/1974	Wesley	
3,852,032	A	12/1974	Urbach	
3,877,502	A	4/1975	Hunckler	
3,914,013	A	10/1975	Rosenberg	
3,918,972	A	11/1975	Evens et al.	
3,946,982	A	3/1976	Calkins et al.	
3,982,541	A	9/1976	L'Esperance, Jr.	
4,010,496	A	3/1977	Neefe	
4,026,869	A	5/1977	Evens et al.	
4,073,015	A	2/1978	Peyman	
4,099,529	A	7/1978	Peyman	
4,116,439	A	9/1978	Chavarria et al.	
4,138,191	A	2/1979	Peyman	
4,191,195	A	3/1980	Miller	
4,210,391	A	7/1980	Cohen	
4,272,191	A	6/1981	Bergkvist	
4,298,004	A	11/1981	Schachar et al.	
4,312,575	A	1/1982	Peyman et al.	
4,340,283	A	7/1982	Cohen	
4,367,949	A	1/1983	Lavering	
4,383,843	A	5/1983	Iyenger	
4,402,579	A	9/1983	Poler	
4,402,681	A	9/1983	Haas et al.	
4,409,979	A	10/1983	Roussel et al.	
4,423,728	A	1/1984	Lieberman	
4,445,892	A	5/1984	Hussein et al.	
4,450,593	A	5/1984	Poler	
4,452,235	A	6/1984	Reynolds	
4,461,294	A	7/1984	Baron	
4,469,098	A	9/1984	Daui	
4,485,499	A	12/1984	Castleman	
4,505,855	A	3/1985	Bruns et al.	
4,528,311	A	7/1985	Beard et al.	
4,536,240	A	8/1985	Winn	
4,538,608	A	9/1985	L'Esperance, Jr.	
4,547,914	A	10/1985	Castleman	
4,547,915	A	10/1985	Castleman	
4,563,565	A	1/1986	Kampfer et al.	
4,573,998	A	3/1986	Mazzocco	
4,575,373	A	3/1986	Johnson	
4,575,915	A	3/1986	Clark et al.	
4,576,453	A	3/1986	Borowsky	
4,582,402	A	4/1986	Knapp	
4,607,617	A	8/1986	Choyce	
4,612,012	A	9/1986	White	
4,615,702	A	10/1986	Koziol et al.	
4,617,023	A	10/1986	Peyman	
4,624,669	A	11/1986	Grendahl	
4,633,866	A	1/1987	Peyman et al.	
4,636,049	A	1/1987	Blaker	
4,636,211	A	1/1987	Nielsen et al.	
4,636,212	A	1/1987	Posin et al.	
4,637,697	A	1/1987	Freeman	
4,639,105	A	1/1987	Neefe	
4,641,934	A	2/1987	Freeman	
4,642,112	A	2/1987	Freeman	
4,646,720	A	3/1987	Peyman	
4,648,400	A	3/1987	Schneider et al.	
4,655,774	A	4/1987	Choyce	
4,662,370	A	5/1987	Hoffmann et al.	
4,665,913	A	5/1987	L'Esperance, Jr.	
4,666,249	A	5/1987	Bauman et al.	
4,666,446	A	5/1987	Koziol et al.	
4,669,466	A	6/1987	L'Esperance, Jr.	
4,669,834	A	6/1987	Richter	
4,672,021	A	6/1987	Blumel et al.	
4,674,503	A	6/1987	Peyman et al.	
4,676,790	A	6/1987	Kern	
4,676,791	A	6/1987	Le Master et al.	
4,678,422	A	7/1987	York	
4,685,921	A	8/1987	Peyman	
4,685,922	A	8/1987	Peyman	
4,701,038	A	10/1987	Neefe	
4,702,574	A	10/1987	Bawa	
4,702,865	A	10/1987	Koziol et al.	
4,704,016	A	11/1987	de Carle	
4,710,003	A	12/1987	Masuda et al.	
4,713,446	A	12/1987	DeVore et al.	
4,715,858	A	12/1987	Lindstrom	
4,718,418	A	1/1988	L'Esperance, Jr.	
4,729,372	A	3/1988	L'Esperance, Jr.	
4,729,373	A	3/1988	Peyman	
4,732,148	A	3/1988	L'Esperance, Jr.	
4,744,360	A	5/1988	Bath	
4,753,654	A	6/1988	Posin et al.	
4,767,647	A	8/1988	Bree	
4,779,973	A	10/1988	Miller et al.	
4,785,796	A	11/1988	Mattson	
4,785,810	A	11/1988	Baccala et al.	
4,787,903	A	11/1988	Grendahl	
4,795,462	A	1/1989	Grendahl	
4,796,623	A	1/1989	Krasner et al.	
4,798,608	A	1/1989	Grendahl	
4,799,478	A	1/1989	Fedorov et al.	
4,799,784	A	1/1989	Safir	
4,799,931	A	1/1989	Lindstrom	
4,806,382	A	2/1989	Goldberg et al.	
4,807,623	A	2/1989	Lieberman	
4,808,181	A	2/1989	Kelman	
4,813,955	A	3/1989	Achatz et al.	
4,814,050	A	3/1989	McGraw et al.	
4,817,789	A	4/1989	Paul	
4,830,855	A *	5/1989	Stewart	424/448
4,838,266	A	6/1989	Koziol et al.	
4,840,175	A	6/1989	Peyman	
4,842,599	A	6/1989	Bronstein	
4,849,323	A	7/1989	Endo et al.	
4,851,003	A	7/1989	Lindstrom	
4,863,466	A	9/1989	Schlegel	
4,865,601	A	9/1989	Caldwell et al.	
4,869,587	A	9/1989	Breger	
4,878,910	A	11/1989	Koziol et al.	
4,881,860	A	11/1989	Kanazawa	
4,881,954	A	11/1989	Bikson et al.	
4,889,795	A	12/1989	Kaifu et al.	
4,890,913	A	1/1990	De Carle	
4,891,043	A	1/1990	Zeimer et al.	
4,892,543	A	1/1990	Turley	
4,898,461	A	2/1990	Portney	
4,903,695	A	2/1990	Warner et al.	
4,907,586	A	3/1990	Bille et al.	
4,923,297	A	5/1990	Arndt	
4,928,815	A	5/1990	Paul	
4,932,970	A	6/1990	Portney	
4,955,904	A	9/1990	Atebara et al.	
4,958,922	A	9/1990	Binh et al.	
4,959,070	A	9/1990	McDonald	
4,961,744	A	10/1990	Kilmer et al.	
4,965,545	A	10/1990	Johnson	
4,971,432	A	11/1990	Koeniger	
4,976,709	A	12/1990	Sand	
4,976,732	A	12/1990	Vorosmarthy	
4,983,181	A	1/1991	Civerchia	
4,985,559	A	1/1991	Goldberg et al.	
4,990,165	A	2/1991	Bikson et al.	
4,994,058	A	2/1991	Raven et al.	
4,994,080	A	2/1991	Shepard	
4,997,268	A	3/1991	Dauvergne	
5,002,571	A	3/1991	O'Donnel, Jr.	
5,013,319	A	5/1991	Davis	
5,019,097	A	5/1991	Knight et al.	
5,026,393	A	6/1991	Mackool	
D318,117	S	7/1991	Michelson	
5,030,230	A	7/1991	White	
5,041,133	A	8/1991	Sayano et al.	
5,055,602	A	10/1991	Melpolder	
5,061,914	A	10/1991	Busch et al.	
5,063,942	A	11/1991	Kilmer et al.	
5,065,516	A	11/1991	Dulebohn	

(56) **References Cited**

U.S. PATENT DOCUMENTS

5,067,961 A 11/1991 Kelman et al.
5,076,684 A 12/1991 Simpson et al.
D323,891 S 2/1992 Arkel
5,087,015 A 2/1992 Galley
5,089,022 A 2/1992 Koester et al.
5,089,024 A 2/1992 Christie et al.
5,090,955 A 2/1992 Simon
5,092,874 A 3/1992 Rogers
5,094,521 A 3/1992 Jolson et al.
5,098,443 A 3/1992 Parel et al.
5,098,444 A 3/1992 Feaster
D325,500 S 4/1992 Dennis
5,104,957 A 4/1992 Kelman et al.
5,108,169 A 4/1992 Mandell
5,108,427 A 4/1992 Majercik et al.
5,108,428 A 4/1992 Capecchi et al.
5,112,328 A 5/1992 Taboada et al.
5,112,350 A 5/1992 Civerchia et al.
5,116,111 A 5/1992 Simpson et al.
5,119,555 A 6/1992 Johnson
5,120,120 A 6/1992 Cohen
5,120,121 A 6/1992 Rawlings et al.
5,123,921 A 6/1992 Werblin et al.
5,133,745 A 7/1992 Falcetta et al.
5,139,518 A 8/1992 White
5,149,331 A 9/1992 Ferdman et al.
5,151,098 A 9/1992 Loertascher
5,152,789 A 10/1992 Willis
5,156,622 A 10/1992 Thompson
5,158,572 A 10/1992 Nielsen
5,160,463 A 11/1992 Evans et al.
5,165,897 A 11/1992 Johnson
5,166,712 A 11/1992 Portney
5,171,318 A 12/1992 Gibson et al.
5,172,143 A 12/1992 Baude et al.
5,185,152 A 2/1993 Peyman
5,188,125 A 2/1993 Kilmer et al.
5,188,494 A 2/1993 Hatin
5,192,316 A 3/1993 Ting
5,192,318 A 3/1993 Schneider et al.
5,196,026 A 3/1993 Barrett et al.
5,196,027 A 3/1993 Thompson et al.
5,201,762 A 4/1993 Hauber
5,203,865 A 4/1993 Siepser
5,215,104 A 6/1993 Steinert
5,219,844 A 6/1993 Peyman et al.
5,225,858 A 7/1993 Portney
5,239,066 A 8/1993 Falkow et al.
5,245,367 A 9/1993 Miller et al.
5,245,738 A 9/1993 Johnson
5,258,412 A 11/1993 Peyman et al.
5,260,727 A 11/1993 Oksman et al.
5,261,997 A 11/1993 Inselmann
5,269,795 A 12/1993 Arnott
5,269,812 A 12/1993 White
5,270,744 A 12/1993 Portney
5,274,404 A 12/1993 Michael
5,282,971 A 2/1994 Degen et al.
5,288,293 A 2/1994 O'Donnell, Jr.
5,288,436 A 2/1994 Liu et al.
5,290,301 A 3/1994 Lieberman
5,292,514 A 3/1994 Capecchi et al.
5,296,305 A 3/1994 Baude et al.
5,296,881 A 3/1994 Freeman
D345,796 S 4/1994 Pernicka
5,300,116 A 4/1994 Chirila et al.
5,300,118 A 4/1994 Silvestrini et al.
5,302,978 A 4/1994 Evans et al.
5,306,297 A 4/1994 Rheinish et al.
5,310,654 A 5/1994 Isberg et al.
5,312,330 A 5/1994 Klopotek
5,312,393 A 5/1994 Mastel
5,312,424 A 5/1994 Kilmer et al.
5,314,439 A 5/1994 Sugita
5,314,961 A 5/1994 Anton et al.
5,315,344 A 5/1994 Clark et al.
5,318,044 A 6/1994 Kilmer et al.
5,318,046 A 6/1994 Rozakis
5,318,047 A 6/1994 Davenport et al.
5,322,649 A 6/1994 Rheinish et al.
5,323,788 A 6/1994 Silvestrini et al.
5,325,880 A 7/1994 Johnson et al.
5,332,802 A 7/1994 Kelman et al.
5,336,261 A 8/1994 Barrett et al.
5,346,689 A 9/1994 Peyman et al.
5,354,331 A 10/1994 Schachar
5,358,520 A 10/1994 Patel
5,366,499 A 11/1994 Py
5,368,604 A 11/1994 Kilmer et al.
5,372,580 A 12/1994 Simon et al.
5,374,272 A 12/1994 Arpa et al.
D354,566 S 1/1995 Donahoo
5,391,201 A 2/1995 Barret et al.
5,401,508 A 3/1995 Manesis
5,403,335 A 4/1995 Loomas et al.
5,405,384 A 4/1995 Silvestrini
5,414,477 A 5/1995 Jahnke
5,422,424 A 6/1995 Selsted et al.
5,433,745 A 7/1995 Graham et al.
5,434,630 A 7/1995 Bransome
5,437,274 A 8/1995 Khoobehi et al.
5,441,511 A 8/1995 Hanna
5,458,819 A 10/1995 Chirila et al.
5,466,260 A 11/1995 Silvestrini et al.
5,474,548 A 12/1995 Knopp et al.
5,475,452 A 12/1995 Kuhn et al.
5,476,515 A 12/1995 Kelman et al.
5,480,427 A 1/1996 Kelman et al.
5,489,300 A 2/1996 Capecchi et al.
5,496,339 A 3/1996 Koepnick
5,505,722 A 4/1996 Kilmer et al.
5,505,723 A 4/1996 Muller
5,507,740 A 4/1996 O'Donnel, Jr.
5,507,741 A 4/1996 L'Esperance, Jr.
5,507,759 A 4/1996 Nordan
5,509,922 A 4/1996 Aranyi et al.
5,516,467 A 5/1996 Niwa et al.
5,516,522 A 5/1996 Peyman et al.
5,522,888 A 6/1996 Civerchia
5,526,178 A 6/1996 Goldstein et al.
5,527,356 A 6/1996 Peyman et al.
5,527,524 A 6/1996 Tomalia et al.
5,547,468 A 8/1996 Simon et al.
5,547,473 A 8/1996 Peyman
5,567,365 A 10/1996 Weinschenk, III et al.
D375,245 S 11/1996 Irving
5,571,177 A 11/1996 Deacon et al.
5,579,063 A 11/1996 Magnante et al.
RE35,421 E 1/1997 Ruiz et al.
5,591,185 A 1/1997 Kilmer et al.
5,592,246 A 1/1997 Kuhn et al.
5,599,341 A 2/1997 Mathis et al.
5,599,537 A 2/1997 Miller, III et al.
5,605,938 A 2/1997 Roufa et al.
5,607,437 A 3/1997 Simon et al.
5,607,472 A 3/1997 Thompson
5,608,471 A 3/1997 Miller
5,610,719 A 3/1997 Allen et al.
5,624,456 A 4/1997 Hellenkamp
5,627,613 A 5/1997 Kaneko
5,628,794 A 5/1997 Lindstrom
5,628,795 A 5/1997 Langerman
5,628,798 A 5/1997 Eggleston et al.
5,631,243 A 5/1997 Kelman et al.
5,632,773 A 5/1997 Graham et al.
5,643,249 A 7/1997 Amano
5,645,582 A 7/1997 Silvestrini et al.
5,647,865 A 7/1997 Swinger
5,653,752 A 8/1997 Silvestrini et al.
5,662,706 A 9/1997 Legerton et al.
5,662,908 A 9/1997 Falkow et al.
5,672,885 A 9/1997 Allen et al.
5,674,724 A 10/1997 Miller, III et al.
5,674,736 A 10/1997 Miller, III et al.

(56) **References Cited**

U.S. PATENT DOCUMENTS

5,693,092 A 12/1997 Silvestrini et al.
5,695,983 A 12/1997 Miller et al.
5,697,923 A 12/1997 Poler
5,697,973 A 12/1997 Peyman et al.
5,702,440 A 12/1997 Portney
5,708,049 A 1/1998 Katagiri et al.
5,713,844 A 2/1998 Peyman
5,713,957 A 2/1998 Steele et al.
5,719,656 A 2/1998 Bowling
5,720,894 A 2/1998 Neev et al.
5,722,971 A 3/1998 Peyman
5,725,575 A 3/1998 O'Donnell, Jr.
5,731,196 A 3/1998 Miller, III et al.
5,731,862 A 3/1998 Winkler
5,733,334 A 3/1998 Lee
5,733,760 A 3/1998 Lu et al.
5,746,558 A 5/1998 Nygren, Jr. et al.
5,752,960 A 5/1998 Nallakrishnan
5,752,967 A 5/1998 Kritzinger et al.
5,757,458 A 5/1998 Miller et al.
5,766,171 A 6/1998 Silvestrini
5,769,889 A 6/1998 Kelman
5,771,088 A 6/1998 Perrott
5,771,742 A 6/1998 Bokaie et al.
5,774,202 A 6/1998 Abraham et al.
5,782,911 A 7/1998 Herrick
5,785,651 A 7/1998 Kuhn et al.
5,786,883 A 7/1998 Miller et al.
5,800,533 A 9/1998 Eggleston et al.
5,806,530 A 9/1998 Herrick
5,814,680 A 9/1998 Imafuku et al.
5,824,086 A 10/1998 Silvestrini
5,833,701 A 11/1998 Gordon
5,836,313 A 11/1998 Perez et al.
5,840,848 A 11/1998 Sturrock et al.
5,843,105 A 12/1998 Mathis et al.
5,846,186 A 12/1998 Upsher
5,846,256 A 12/1998 Mathis et al.
5,855,605 A 1/1999 Herrick
5,858,980 A 1/1999 Weiner et al.
5,861,486 A 1/1999 Devore et al.
5,863,537 A 1/1999 Dalliet et al.
5,864,128 A 1/1999 Plesko
5,864,378 A 1/1999 Portney
5,865,729 A 2/1999 Meehan et al.
5,870,167 A 2/1999 Knopp et al.
5,874,537 A 2/1999 Kelman et al.
5,876,442 A 3/1999 Lipshitz et al.
5,888,243 A 3/1999 Silverstrini
5,903,099 A 5/1999 Johnson et al.
5,905,561 A 5/1999 Lee et al.
5,919,185 A 7/1999 Peyman
5,928,283 A 7/1999 Gross et al.
5,929,968 A 7/1999 Cotie et al.
5,935,140 A 8/1999 Buratto
5,944,752 A 8/1999 Silvestrini
5,960,812 A 10/1999 Johnson
5,964,748 A 10/1999 Peyman
5,964,776 A 10/1999 Peyman
5,965,330 A 10/1999 Evans et al.
5,968,062 A 10/1999 Thomas et al.
5,980,040 A 11/1999 Xu et al.
5,997,559 A 12/1999 Ziemer
6,001,386 A 12/1999 Ashton et al.
6,010,510 A 1/2000 Brown et al.
6,010,901 A 1/2000 Miller, III et al.
6,017,121 A 1/2000 Chateau et al.
6,024,447 A 2/2000 Portney
6,036,957 A 3/2000 Weiner et al.
D423,669 S 4/2000 Huttner
6,050,999 A 4/2000 Paraschac et al.
6,051,023 A 4/2000 Kilmer et al.
6,063,073 A 5/2000 Peyman
6,066,171 A 5/2000 Lipshitz et al.
6,083,236 A 7/2000 Feingold
6,086,204 A 7/2000 Magnante
6,090,141 A 7/2000 Lindstrom
6,096,077 A 8/2000 Callahan et al.
6,102,946 A 8/2000 Nigam
6,106,552 A 8/2000 Lacombe et al.
6,110,166 A 8/2000 Juhasz
6,125,294 A 9/2000 Scholl et al.
6,126,286 A 10/2000 Portney
6,138,307 A 10/2000 McDonald
6,143,010 A 11/2000 Silvestrini
6,152,959 A 11/2000 Portney
6,161,544 A 12/2000 DeVore et al.
6,164,282 A 12/2000 Gwon et al.
6,165,189 A 12/2000 Ziemer
6,171,336 B1 1/2001 Sawusch
6,175,754 B1 1/2001 Scholl et al.
6,176,878 B1 1/2001 Gwon et al.
6,178,593 B1 1/2001 Carlson
6,183,498 B1 2/2001 DeVore et al.
D439,338 S 3/2001 Huttner
6,197,019 B1 3/2001 Peyman
6,197,057 B1 3/2001 Peyman et al.
6,197,934 B1 3/2001 DeVore et al.
6,203,538 B1 3/2001 Peyman
6,204,365 B1 3/2001 DeVore et al.
6,210,005 B1 4/2001 Portney
6,210,401 B1 4/2001 Lai
6,214,044 B1 4/2001 Silvestrini
6,217,571 B1 4/2001 Peyman
6,217,596 B1 4/2001 Farah
6,218,360 B1 4/2001 Cintron et al.
6,221,067 B1 4/2001 Peyman
6,221,105 B1 4/2001 Portney
6,228,113 B1 5/2001 Kauffman
6,228,114 B1 5/2001 Lee
6,228,115 B1 5/2001 Hoffmann et al.
6,231,582 B1 5/2001 Gandianco et al.
6,251,118 B1 6/2001 Proudfoot et al.
6,264,648 B1 7/2001 Peyman
D447,237 S 8/2001 Huttner et al.
6,277,146 B1 8/2001 Peyman et al.
6,280,449 B1 8/2001 Blake
6,280,470 B1 8/2001 Peyman
6,280,471 B1 8/2001 Peyman
6,283,595 B1 9/2001 Breger
6,302,877 B1 10/2001 Ruiz
6,308,590 B1 10/2001 Berto
6,312,424 B1 11/2001 Largent
6,316,153 B1 11/2001 Goodman et al.
6,335,006 B1 1/2002 Miller
6,357,875 B1 3/2002 Herrick
6,358,280 B1 3/2002 Herrick
6,361,560 B1 3/2002 Nigam
6,371,973 B1 4/2002 Tepper
6,387,379 B1 5/2002 Goldberg et al.
6,391,055 B1 5/2002 Ikada et al.
6,399,734 B1 6/2002 Hodd et al.
6,403,947 B1 6/2002 Hoyt et al.
6,406,494 B1 6/2002 Laguette et al.
6,413,276 B1 7/2002 Werblin
6,416,179 B1 7/2002 Lieberman et al.
6,419,697 B1 7/2002 Kelman
6,423,093 B1 7/2002 Hicks et al.
6,425,917 B1 7/2002 Blake
6,432,246 B1 8/2002 Blake
6,436,092 B1 8/2002 Peyman
6,450,642 B1 9/2002 Jethmalani et al.
6,454,800 B2 9/2002 Dalton et al.
6,457,826 B1 10/2002 Lett
6,458,141 B1 10/2002 Peyman
6,470,108 B1 10/2002 Johnson
6,488,707 B1 12/2002 Callahan et al.
6,494,910 B1 12/2002 Ganem et al.
6,497,700 B1 12/2002 LaHaye
6,503,276 B2 1/2003 Lang et al.
6,515,006 B2 2/2003 Horn
6,520,955 B2 2/2003 Reynard
6,527,389 B2 3/2003 Portney
6,533,905 B2 3/2003 Johnson et al.

(56) **References Cited**

U.S. PATENT DOCUMENTS

6,536,899 B1 3/2003 Fiala
6,551,307 B2 4/2003 Peyman
6,554,424 B1 4/2003 Miller et al.
6,554,860 B2 4/2003 Hoffmann et al.
6,555,103 B2 4/2003 Leukel et al.
6,569,199 B1 5/2003 Dotan et al.
6,575,573 B2 6/2003 Lai et al.
6,581,993 B2 6/2003 Nigam
RE38,193 E 7/2003 Bowling
6,588,022 B1 7/2003 Anders et al.
6,588,902 B2 7/2003 Isogai
6,589,280 B1 7/2003 Koziol
6,592,621 B1 7/2003 Domino
6,596,026 B1 7/2003 Gross et al.
6,599,305 B1 7/2003 Feingold
6,607,527 B1 8/2003 Ruiz et al.
6,607,556 B1 8/2003 Nigam
6,613,088 B1 9/2003 Babizhayev
6,614,570 B2 9/2003 Johnson et al.
6,620,634 B2 9/2003 Johnson et al.
6,623,497 B1 9/2003 Feingold
6,623,522 B2 9/2003 Nigam
6,624,730 B2 9/2003 Johnson et al.
6,626,941 B2 9/2003 Nigam
6,632,244 B1 10/2003 Nigam
6,638,304 B2 10/2003 Azar
6,663,668 B1 12/2003 Chaouk et al.
6,669,795 B2 12/2003 Johnson et al.
6,673,112 B2 1/2004 Nigam
6,692,126 B1 2/2004 Xie et al.
6,702,807 B2 3/2004 Peyman
6,729,599 B2 5/2004 Johnson
6,740,116 B2 5/2004 Morcher
6,742,761 B2 6/2004 Johnson et al.
6,746,890 B2 6/2004 Gupta et al.
6,749,632 B2 6/2004 Jethmalani et al.
6,755,819 B1 6/2004 Waelti
6,755,858 B1 6/2004 White
D493,889 S 8/2004 Yoo
6,786,926 B2 9/2004 Peyman
6,790,298 B2 9/2004 Johnson et al.
6,811,256 B1 11/2004 Becherer et al.
6,813,097 B2 11/2004 Jethmalani et al.
6,824,266 B2 11/2004 Jethmalani et al.
6,849,090 B2 2/2005 Nigam
6,851,804 B2 2/2005 Jethmalani et al.
6,855,163 B2 2/2005 Peyman
6,874,886 B2 4/2005 Miller et al.
6,899,424 B2 5/2005 Miller et al.
6,949,093 B1 9/2005 Peyman
6,951,556 B2 10/2005 Epstein
6,966,648 B2 11/2005 Miller et al.
6,976,997 B2 12/2005 Noolandi et al.
6,986,763 B2 1/2006 Holmen
6,989,008 B2 1/2006 Peyman
7,001,374 B2 2/2006 Peyman
7,008,447 B2 3/2006 Koziol
7,025,455 B2 4/2006 Roffman
7,097,649 B2 8/2006 Meyer
7,179,292 B2 2/2007 Worst et al.
7,207,998 B2 4/2007 Feingold
7,364,674 B1 4/2008 Hoover
D569,512 S 5/2008 Poll et al.
D571,915 S 6/2008 Poll et al.
7,399,811 B2 7/2008 Mentak et al.
7,404,637 B2 7/2008 Miller et al.
7,404,638 B2 7/2008 Miller et al.
7,446,157 B2 11/2008 Mentak et al.
7,462,194 B1 12/2008 Blake
7,491,350 B2 2/2009 Silvestrini
D589,615 S 3/2009 Doenges et al.
7,628,810 B2 12/2009 Christie et al.
7,645,291 B2 1/2010 Ross et al.
7,645,299 B2 1/2010 Koziol
7,745,555 B2 6/2010 Mentak et al.
7,828,844 B2 11/2010 Marmo et al.
7,976,577 B2 7/2011 Silvestrini
D645,337 S 9/2011 Hsu et al.
8,048,972 B2 11/2011 Mentak et al.
8,079,706 B2 12/2011 Silvestrini et al.
D656,526 S 3/2012 Christie et al.
8,216,765 B2 7/2012 Morimitsu et al.
8,287,592 B2 10/2012 Silvestrini
8,343,215 B2 1/2013 Miller et al.
8,349,006 B2 1/2013 Zhao et al.
D681,086 S 4/2013 Christie et al.
8,420,753 B2 4/2013 Mentak et al.
8,460,374 B2 6/2013 Christie et al.
8,568,478 B2 10/2013 Zickler et al.
8,604,098 B2 12/2013 Boydston et al.
8,633,292 B2 * 1/2014 Hu et al. 528/28
8,740,978 B2 6/2014 Weeber et al.
8,752,958 B2 6/2014 Miller et al.
2001/0004702 A1 6/2001 Peyman
2001/0027314 A1 10/2001 Peyman
2001/0034516 A1 10/2001 Peyman
2001/0047203 A1 11/2001 Dalton et al.
2001/0050750 A1 12/2001 Breger
2002/0010510 A1 1/2002 Silvestrini
2002/0016629 A1 2/2002 Sandstedt et al.
2002/0028330 A1 3/2002 Patel et al.
2002/0029981 A1 3/2002 Nigam
2002/0042004 A1 4/2002 Sandstedt et al.
2002/0055753 A1 5/2002 Silvestrini
2002/0057148 A1 5/2002 Johnson et al.
2002/0075447 A1 6/2002 Andino et al.
2002/0082288 A1 6/2002 Horn
2002/0107337 A1 8/2002 Rosenzweig et al.
2002/0107566 A1 8/2002 Nigam
2002/0111677 A1 8/2002 Nigam
2002/0120329 A1 8/2002 Lang et al.
2002/0128710 A1 9/2002 Eggleston
2002/0133228 A1 9/2002 Sarver
2002/0138070 A1 9/2002 Peyman
2002/0167640 A1 11/2002 Francis et al.
2002/0167735 A1 11/2002 Jethmalani et al.
2002/0169491 A1 11/2002 Foster et al.
2002/0169505 A1 11/2002 Jethmalani et al.
2002/0173846 A1 11/2002 Blake et al.
2002/0187986 A1 12/2002 Horn
2002/0188351 A1 12/2002 Laguette
2002/0196409 A1 12/2002 Jani
2003/0002994 A1 1/2003 Johnson et al.
2003/0007122 A1 1/2003 Streibig
2003/0014021 A1 1/2003 Holmen
2003/0014042 A1 1/2003 Juhasz et al.
2003/0014107 A1 1/2003 Reynard
2003/0033013 A1 2/2003 Callahan et al.
2003/0045930 A1 3/2003 Nguyen
2003/0048411 A1 3/2003 Jethmalani et al.
2003/0055497 A1 3/2003 Hicks et al.
2003/0071893 A1 4/2003 Miller et al.
2003/0078655 A1 4/2003 Callahan et al.
2003/0088313 A1 5/2003 Nigam
2003/0090013 A1 5/2003 Jethmalani et al.
2003/0090624 A1 5/2003 Jethmalani et al.
2003/0093083 A1 5/2003 Peyman
2003/0093150 A1 5/2003 Jethmalani et al.
2003/0105521 A1 6/2003 Perez
2003/0115718 A1 6/2003 Bechthold
2003/0127318 A1 7/2003 Johnson et al.
2003/0128336 A1 7/2003 Jethmalani et al.
2003/0151825 A1 8/2003 Bielawski et al.
2003/0151831 A1 8/2003 Sandstedt et al.
2003/0174375 A1 9/2003 Jethmalani et al.
2003/0176521 A1 9/2003 Jethmalani et al.
2003/0216763 A1 11/2003 Patel
2003/0220653 A1 11/2003 Perez
2004/0014253 A1 1/2004 Gupta et al.
2004/0015234 A1 1/2004 Peyman
2004/0019379 A1 1/2004 Glick et al.
2004/0047014 A1 3/2004 Parker et al.
2004/0049174 A1 3/2004 Peyman
2004/0056371 A1 3/2004 Liao et al.

(56) **References Cited**

U.S. PATENT DOCUMENTS

2004/0068317	A1	4/2004	Knight
2004/0078075	A1	4/2004	Koziol
2004/0080239	A1	4/2004	Gupta et al.
2004/0086479	A1	5/2004	Grinstaff et al.
2004/0106929	A1	6/2004	Masket
2004/0243231	A1	12/2004	Koziol
2005/0027354	A1	2/2005	Brady et al.
2005/0027355	A1	2/2005	Murakami
2005/0031697	A1	2/2005	Vehige et al.
2005/0033420	A1	2/2005	Christie et al.
2005/0046794	A1	3/2005	Silvestrini et al.
2005/0049621	A1	3/2005	Feingold et al.
2005/0080485	A1	4/2005	Nigam
2005/0090895	A1	4/2005	Peyman
2005/0099597	A1	5/2005	Sandstedt et al.
2005/0119738	A1	6/2005	Nigam
2005/0124983	A1	6/2005	Frey et al.
2005/0143717	A1	6/2005	Peyman
2005/0143812	A1	6/2005	Paul et al.
2005/0182488	A1	8/2005	Peyman
2005/0187621	A1	8/2005	Brady
2005/0222679	A1	10/2005	Peyman
2005/0228376	A1	10/2005	Vannoy
2005/0246015	A1	11/2005	Miller
2005/0246016	A1	11/2005	Miller et al.
2005/0246019	A1	11/2005	Blake et al.
2006/0064077	A1	3/2006	Peyman
2006/0079959	A1	4/2006	Christie et al.
2006/0079960	A1	4/2006	Christie et al.
2006/0095127	A1	5/2006	Feingold et al.
2006/0098162	A1	5/2006	Bandhauer et al.
2006/0113054	A1	6/2006	Silvestrini
2006/0118263	A1	6/2006	Silvestrini
2006/0184243	A1	8/2006	Yilmaz
2006/0203192	A1	9/2006	Miller et al.
2006/0235428	A1	10/2006	Silvestrini
2006/0241751	A1	10/2006	Marmo et al.
2006/0252844	A1	11/2006	Mentak
2006/0265058	A1	11/2006	Silvestrini
2006/0268226	A1	11/2006	Christie et al.
2006/0268227	A1	11/2006	Christie et al.
2006/0268228	A1	11/2006	Christie et al.
2006/0268229	A1	11/2006	Silvestrini et al.
2006/0270946	A1	11/2006	Silvestrini et al.
2006/0271026	A1	11/2006	Silvestrini et al.
2006/0271027	A1	11/2006	Silvestrini et al.
2006/0271176	A1	11/2006	Christie et al.
2006/0271177	A1	11/2006	Christie et al.
2006/0271178	A1	11/2006	Christie et al.
2006/0271179	A1	11/2006	Christie et al.
2006/0271180	A1	11/2006	Christie et al.
2006/0271181	A1	11/2006	Christie et al.
2006/0271182	A1	11/2006	Christie et al.
2006/0271183	A1	11/2006	Christie et al.
2006/0271184	A1	11/2006	Silvestrini
2006/0271185	A1	11/2006	Silvestrini
2006/0274264	A1	12/2006	Christie et al.
2006/0274265	A1	12/2006	Christie et al.
2007/0016234	A1	1/2007	Daxer
2007/0129797	A1	6/2007	Lang et al.
2007/0219542	A1	9/2007	Yahagi
2007/0225691	A1	9/2007	Silvestrini et al.
2008/0033546	A1	2/2008	Liang
2008/0077238	A1	3/2008	Deacon et al.
2008/0125862	A1	5/2008	Blake
2008/0151183	A1	6/2008	Altmann
2008/0212030	A1	9/2008	Bentley et al.
2008/0275462	A1	11/2008	Feingold
2009/0012505	A1	1/2009	Chernyak
2009/0059168	A1	3/2009	Miller et al.
2009/0069817	A1	3/2009	Peyman
2009/0204207	A1	8/2009	Blum et al.
2009/0222086	A1	9/2009	Lui et al.
2009/0306773	A1	12/2009	Silvestrini et al.
2010/0234942	A1	9/2010	Peyman
2010/0312336	A1	12/2010	Hong et al.
2011/0040376	A1*	2/2011	Christie et al. 623/6.17
2011/0172675	A1	7/2011	Danta et al.
2011/0245818	A1	10/2011	Weinschenk, III
2011/0245919	A1*	10/2011	Pettit 623/6.22
2012/0143325	A1	6/2012	Christie et al.
2012/0203239	A1	8/2012	Vukich et al.
2012/0245683	A1	9/2012	Christie et al.
2012/0309761	A1	12/2012	Chow et al.
2012/0310338	A1	12/2012	Christie et al.
2013/0053953	A1	2/2013	Silvestrini
2013/0103147	A1	4/2013	Christie et al.
2013/0131795	A1	5/2013	Miller et al.
2013/0238091	A1	9/2013	Danta et al.
2013/0268071	A1	10/2013	Vilupuru et al.
2014/0131905	A1	5/2014	Webb

FOREIGN PATENT DOCUMENTS

AR	244 890		11/1993
AU	739297		1/2002
AU	0772492		8/2004
AU	778310		3/2005
AU	2003252004		3/2010
AU	2006236715		6/2012
BR	0008601	A	12/2001
BR	0008624	A	12/2001
BR	PI-9809289-8		12/2006
CA	2286718		11/2008
CN	1253484	A	5/2000
CN	1875895		12/2006
CN	101198294		6/2008
CN	101198364		6/2008
CN	101322663		12/2008
CN	102448404		5/2012
CN	102470033	A	5/2012
DE	3433581		3/1986
DE	41 34 320	A1	4/1992
EP	0165652		12/1985
EP	0225098		6/1987
EP	0286433		10/1988
EP	0443094	A2	8/1991
EP	0457553	A2	11/1991
EP	0941717		9/1999
EP	1014872		7/2000
EP	1173790		1/2002
EP	1267998		1/2003
EP	1381326		1/2004
EP	1871298		4/2006
EP	1159033		1/2007
EP	1827330		9/2007
EP	1845896		10/2007
EP	1890736		2/2008
EP	1158936		7/2008
EP	1997530		12/2008
EP	1534188		9/2010
EP	2258311		12/2010
EP	2301477		3/2011
EP	1635739		9/2011
EP	2464310		6/2012
EP	2464311		6/2012
EP	2506803		10/2012
FR	369 993		1/1907
FR	1115140		12/1955
FR	1400566		4/1965
FR	2599156		5/1986
FR	2620687		3/1989
FR	2649605		1/1991
GB	1 026 839		4/1966
GB	1276003		6/1972
GB	1 547 525		6/1979
GB	2242835		10/1991
HK	1028531		2/2011
HK	1151451		2/2012
HK	11553484		5/2012
HK	1166457	A	11/2012
HK	1169935	A	2/2013
JP	62167343	A	7/1987
JP	63-17096		4/1988

(56) **References Cited**

FOREIGN PATENT DOCUMENTS

JP	64-002644		1/1989
JP	1990-7954		1/1990
JP	03-001857		1/1991
JP	04-158859		6/1992
JP	04-223425		8/1992
JP	06-509731		3/1993
JP	H05-65340		9/1993
JP	6-502782		3/1994
JP	6-509731		11/1994
JP	07-050242		2/1995
JP	07-178125		7/1995
JP	07-265340		10/1995
JP	08-103457		4/1996
JP	09-502542		3/1997
JP	11-503657		8/1997
JP	2002-14772		1/2002
JP	2003-527228		9/2003
JP	2004-510199		4/2004
JP	2004-538034		12/2004
JP	2005-533576		11/2005
JP	2007-516019		6/2007
JP	2007-523720		8/2007
JP	4114036		4/2008
JP	2008-517671		5/2008
JP	2008-536574		9/2008
JP	2008-536576		9/2008
JP	4182390		9/2008
JP	2010-227615		10/2010
JP	2010-126600		2/2011
JP	4676761		2/2011
JP	4689615		2/2011
JP	4746052		5/2011
KR	10-0335722		5/2002
KR	600210		7/2006
MX	1008759	A	7/2003
MX	226369		2/2005
MX	227913		3/2006
NZ	562987		2/2010
RU	1380743	A1	3/1998
RU	2138837	C1	9/1999
SG	68726		2/2002
SG	83306		2/2004
SG	83307		7/2004
SG	200716909-7		3/2011
WO	WO 87/05797		10/1987
WO	WO 87/07165		12/1987
WO	WO 91/16865		11/1991
WO	WO 92/05694		4/1992
WO	WO 93/03776		3/1993
WO	WO 93/08878		5/1993
WO	WO 93/12735		7/1993
WO	WO 93/20763		10/1993
WO	WO 94/01058		1/1994
WO	WO 94/05232		3/1994
WO	WO 94/23327		10/1994
WO	WO 95/02356		1/1995
WO	WO 95/03747		2/1995
WO	WO 95/08135		3/1995
WO	WO 96/35397		11/1996
WO	WO 97/28759		8/1997
WO	WO 97/48004		12/1997
WO	WO 97/48005		12/1997
WO	WO 98/27896		7/1998
WO	WO 98/48715		11/1998
WO	WO 99/07309		2/1999
WO	WO 00/25704		5/2000
WO	WO 00/38594		7/2000
WO	WO 00/51682		9/2000
WO	WO 00/52516	A2	9/2000
WO	WO 01/10641	A	2/2001
WO	WO 01/15779		3/2001
WO	WO 01/17460		3/2001
WO	WO 01/19364		3/2001
WO	WO 01/82815		11/2001
WO	WO 01/87189		11/2001
WO	WO 02/13881		2/2002
WO	WO 02/27388		4/2002
WO	WO 02/076320		10/2002
WO	WO 02/102241	A2	12/2002
WO	WO 03/020177		3/2003
WO	WO 03/022168		3/2003
WO	WO 03/030763	A1	4/2003
WO	WO 03/061518	A2	7/2003
WO	WO 2004/014969		2/2004
WO	WO 2004/034917		4/2004
WO	WO 2004/050132		6/2004
WO	WO 2004/105588		12/2004
WO	WO 2004/105588	A2	12/2004
WO	WO 2005/033263		4/2005
WO	WO 2005/082265		9/2005
WO	WO 2006/020638		2/2006
WO	WO 2006/047534		5/2006
WO	WO 2006/047698		5/2006
WO	WO 2006/060380		6/2006
WO	WO 2006/113377		10/2006
WO	WO 2006/113411		10/2006
WO	WO 2006/113474		10/2006
WO	WO 2006/113563	A1	10/2006
WO	WO 2006/113564	A2	10/2006
WO	WO 2007/057734		5/2007
WO	WO 2007/057734		10/2007
WO	WO 2007/142981		12/2007
WO	WO 2008/036671		3/2008
WO	WO 2008/102096		8/2008
WO	WO 2008/121649		10/2008
WO	WO 2009/050511		4/2009
WO	WO 2009/122409		10/2009
WO	WO 2009/149060		12/2009
WO	WO 2011/020074		2/2011
WO	WO 2011/020078		2/2011
WO	WO 2011/047076		4/2011
WO	WO 2011/069059		6/2011
WO	WO 2011/088107		7/2011
WO	WO 2013/082545		6/2013
WO	WO 2013/123265		8/2013
WO	WO 2014/074610		5/2014

OTHER PUBLICATIONS

Accommodation and Presbyopia. Croft et al., International Opthalmology Clinics: Spring 2001, vol. 41, Issue 2, pp. 33-46.

Accomodation dynamics as a function of age. Heron et al. Ophthal. Physiol. Opt. 2002 22:389-396.

Accommodation Responses and Ageing. Heron et al. IOVS, Nov. 1999, vol. 40, No. 12, pp. 2872-2883.

Accommodative responses to anisoaccommodative targets. Koh et al. Ophthal. Physiol. Opt. vol. 18, No. 3, pp. 254-262, 1998.

Accommodation responses to flickering stimuli. Chauhan et al. Ophthal. Physiol. Opt. vol. 16. No. 5, pp. 391-408, 1996.

Accommodation to perceived depth in stereo tests. Koh et al. Ophthal. Physiol. Opt. vol. 18, No. 3, pp. 279-284, 1998.

Age Changes in the Interactions between the Accommodation and Vergence Systems. Heron et al. Optometry and Vision Science. vol. 78, No. 10, Oct. 2001.

Anterior Ciliary Sclerotomy for Treatment of Presbyopia: A Prospective Controlled Study. Hamilton et al. Ophthalmology, vol. 109, No. 11: Nov. 2002: pp. 1970-1977.

Barraquer, "Keratomileusis for Myopia and Aphakia", Ophthalmology, Rochester 88:701-708, 1981.

Binder et al., "Hydrogel keratophakia in non-human primates", Current Eye Research, vol. 1, No. 9, 1981/1982, pp. 535-542.

Brooks, J. et al., Identification of a vimentin-reactive Peptide associated with ocular lens membranes as cytokeratin, Ophthalmic Res., Jan.-Feb. 2003, pp. 8-11, vol. 35.

Cao et al, "Comparative study of the use of poly(glycolic acid), calcium alginate and pluronics in the engineering of autologous porcine cartilage", Polymers for Tissue Engineering, pp. 315-327, VSP 1998.

Can Accommodation be Surgically Restored in Human Presbyopia? Glasser, Adrian. Optometry and Vision Science, vol. 76, No. 9, Sep. 1999.

(56) **References Cited**

OTHER PUBLICATIONS

Changes in the static accommodation response with age. Kalsi et al. Ophthal. Physiol. Opt. vol. 21, No. 1, pp. 77-84, 2001.
Choice of Spatial Frequency for Contrast Sensitivity Evaluation After Corneal Refractive Surgery. Montes-Mico et al. Journal of Refractive Surgery, vol. 17: Nov./Dec. 2001: pp. 646-651.
Chow, C., et al., Broadband optical ultrasound sensor with a unique open-cavity structure, J. Biomed. Opt., Jan.-Feb. 2011, pp. 017001, vol. 16.
Choyce, P. "Implants with Coloured and Opaque Portions: Implants with Built-In Stenopeic Aperture," pp. 21-26 "Uniocular Aphakia Corrected by Anterior Chamber Implants with Built-In Stenopeic Aperture," pp. 132-136, 1964.
Clinical Characteristics of Lamellar Channel Deposits After Implementation of Intacs. Ruckhofer et al. J Cataract Refract Surg, vol. 26, Oct. 2000: pp. 1473-1479.
Contemporary Polymer Applications for Corneal Surgery. McCarey, Bernard E. pp. 504-505.
Cotliar et al., "Excimer Laser Radial Keratotomy", Ophthalmology, 1985.
Corneal Topography: The State of the Art, Alignment of Videokeratographs. Mandell et al. Chpt. 2, pp. 17-23, Jan. 1995.
"Corneal Surgery" by L. Girard, The C.V. Mosby Publishing Company, London 1981 pp. 107-141.
Dynamics of the accommodation response to abrupt changes in target vergence as a function of age. Heron et al. Vision Research 41 (2001) 507-519.
Dynamic retinoscopy and accomodation. Whitefoot et al. Ophthal. Physiol. Opt. vol. 12, Jan. 1992, pp. 8-17.
Eduard Jaeger's Test-Types (Schrift-Scalen) and Historical Development of Vision Tests. Runge, Paul E. Tr. Am. Ophth. Soc. vol. 98, 2000: 375.
Eight Years Experience with Permalens Intracorneal Lenses in Non-human Primates. Werblin et al. Refractive & Corneal Surgery, vol. 8, Jan./Feb. 1992, pp. 12-21.
"Epikeratophakia: Techniques, Compositions, and Clinical Results" by Werblin, Ophthalmology, 1983, pp. 45-58.
Errors in determining the direction of the visual axis in the presence of defocus. Atchison et al. Ophthal. Physiol. Opt., vol. 18, No. 5, pp. 463-467, 1998.
Evaluate surgical routine to determine DLK cause, surgeon advises. Piechocki, Michael. Ocular Surgery News: Refractive Surgery, Jan. 1, 2003: p. 14.
Explanation for the observation of isogyres in crystalline lenses viewed between crossed polarizers. Ophthal. Physiol. Opt., vol. 13, Apr. 1993, pp. 209-211.
FDA Summary of Safety and Effectiveness Data for Tecnis Multifocal Posterior Chamber Intraocular Lens, Models ZM900 and ZMA00, 2009.
FDA Summary of Safety and Effectiveness Data for the Advanced Vision Science, Inc. XACT Foldable Hydrophopic Acrylic Ultraviolet Light-Absorving Posterior Chamber Intraocular Lens (Model X-60 and Model X-70), 2009.
FDA Summary of Safety and Effectiveness Data for EC-3 IOL, (Models EC-3 IOL and EC-3 Precision Aspheric Lens), 2010.
FDA Summary of Safety and Effectiveness Data for Aaren Scientific's EC-3 IOL, 2010.
FDA Summary of Safety and Effectiveness Data for XACT Foldable Hydrophopic Acrylic UV Absorving Posterior Chamber Intraocular Lens discussing clinical investigation beginning on May 8, 2002.
Flap Measurements With the Hansatome Microkeratome. Spadea et al. Journal of Refractive Surgery, vol. 18, Mar./Apr. 2002: pp. 149-154.
Focused and divided attention in stereoscopic depth. Wickens et al. SPIE, vol. 1256 Stereoscopic Displays and Applications (1990); pp. 28-34.
Gamez, G., et al., Development of a pulsed radio frequency glow discharge for three-dimensional elemental surface imaging. 1. Application to biopolymer analysis, Anal. Chem., Feb. 2007, pp. 1317-1326, vol. 79.
Glasier, M., et al., A solid-phase assay for the quantitation of total protein eluted from balafilcon, lotrafilcon, and etafilcon contact lenses, Current Eye Research, 2008, pp. 631-640, vol. 33.
Griffith et al.; "Functional Human Corneal Equivalents Constructed from Cell Lines", Science, vol. 286, Dec. 10, 1999 pp. 2169-2172.
Groppi, J. J. "New Aspects in the Fitting of the Multi-Range Bifocal Contact Lens" Contacto, vol. 15:22-29 1971.
Hara, T., et al., Accommodative intraocular lens with spring action. Part 1. Design and placement in an excised animal eye, Ophthalmic Surg., Feb. 1990, vol. 21.
Hara, T., et al., Ten-year results of anterior chamber fixation of the posterior chamber intraocular lens, Arch. Ophthalmol., Aug. 2004, pp. 1112-1116.
Hayasaka, S., et al., Scanning electron microscopic study of polyvinylidene fluoride degradation by ocular tissue extracts, Jpn. J. Ophthalmol., 1984, pp. 131-135, vol. 28.
Hayashi, K., et al., Intraocular lens factors that may affect anterior capsule contraction, Ophthalmology, Feb. 2005, pp. 286-292, vol. 112.
Hayashi, K., et al., Comparison of decentration and tilt between one piece and three piece polymethyl methacrylate intraocular lenses, Br. J. Ophthalmol., Apr. 1998, pp. 419-422, vol. 82.
Hidaka, T., et al, Adaptive optics instrumentation in submillimeter/terahertz spectroscopy with a flexible polyvinylidene fluoride cladding hollow waveguide, Rev. Sci. Instrum., 2007, pp. 25-26, vol. 78.
Hoffer et al., "UCLA Clinical Trial of Radial Keratotomy" Opthalmology, Aug. 1981; 88:729-736.
Holes in Clear Lenses Demonstrate a Pinhole Effect. Zacharia et al. Arch Ophthalmol, vol. 106, Apr. 1988, pp. 511-513.
Human Visual System—Image Formation, Encyclopedia of Imaging Science and Technology, Roorda, A., 2002, pp. 539-557.
Hybrid diffractive-refractive achromatic spectacle lenses. Charman, W. N. Ophthal. Physiol. Opt., vol. 14, Oct. 1994: pp. 389-392.
Iijima et al. "Formation of a spherical multicellular aggregate (spheroid) of animal cells in the pores of polyurethane foam as a cell culture substratum and its application to a hybrid artificial liver", Polymers for Tissue Engineering , pp. 273-286, VSP 1998.
Imaging in the 21st century. Charman, W. N. Ophthal. Physiol. Opt., vol. 18, No. 2, pp. 210-223,1998.
Intra-Ocular Lenses and Implants. Choyce, Peter. Chpts.4 & 17, 1964.
Intraocular pressure after excimer laser myopic refractive surgery. Montes-Mico et al. Ophthal. Physiol. Opt., vol. 21, No. 3, pp. 228-235, 2001.
Intrastromal Crystalline Deposits Following Hydrogel Keratophakia in Monkeys. Parks et al. Cornea, 12(1): 29-34, 1993.
Izak, A., et al., Loop memory of haptic materials in posterior chamber intraocular lenses, J. Cataract Refract. Surg., Jul. 2002, pp. 1129-1135, vol. 28.
"Katena Eye Instruments Catalog—Blaydes" dated Feb. 22, 2010, obtained from the Internet at: www.katena.com/html/product_detail.cfm in 1 page and printed on Feb. 22, 2010.
Kenyon. "Recurrent Corneal Erosion: Pathogenesis and Therapy," 1978, pp. 169-195.
"Keratomileusis and Keratophakia in the Surgical Correction of Aphakia" by Barraquer, Cataract Surgery and Special Techniques, prior to 1996 pp. 270-289.
Khodadoust et al., "Adhesion of Regenerating Corneal Epithelium," Am. J. of Opthalmology, Mar. 1968, pp. 339-348.
Kimura, W., et al., Comparison of shape recovery ratios in various IOL haptics, Nippon Ganka Gakkai Zasshi, Jun. 1991, pp. 548-555, vol. 95.
Kimura, W., et al., Comparison of shape recovery ratios in various intraocular lens haptics, J. Cataract. Refract. Surg., Nov. 1992, pp. 547-553, vol. 18.
Kimura, W., et al., Comparison of shape recovery ratios of single-piece poly(methyl methacrylate) intraocular lens haptics., J. Cataract. Refract. Surg., Sep. 1993, pp. 635-639, vol. 19.
Ko, A., et al., Seroreactivity against aqueous-soluble and detergent-soluble retinal proteins in posterior uveitis, Arch. Ophthalmol., Apr. 2011, pp. 415-420, vol. 129.

(56) **References Cited**

OTHER PUBLICATIONS

Kocak, N., et al., Intraocular lens haptic fracturing with the neodymium: YAG laser in vitro study, J. Cataract Refract. Surg., Apr. 2006, pp. 662-665, vol. 32.

Kruusing, A. Underwater and water-assisted laser processing: Part 2—Etching, cutting and rarely used methods. Optics and Lasers in Engineering, 2004: pp. 329-352.

"Lamellar Corneal Stromectomy for the Operative Treatment of Myopia" by Tadeusz Krwawicz, Notes, Cases, Instruments—1964, pp. 828-833.

Lipid Deposits Posterior to Impermeable Intracorneal Lenses in Rhesus Monkeys: Clinical, Histochemical, and Ultrastructural Studies. Rodrigues et al. Refractive & Corneal Surgery, vol. 6, Jan./Feb. 1990: DO. 32-37.

Lu Xuequan. Zhai Madlin, Li Jiuqiang, Ha Hongfei: "Radiation preparation and thermo-response swelling of interpenetrating polymer network hydrogel composed of PNIPAAm and PMMA" Radiation Physics and Chemistry, vol. 57, 2000, pp. 477-480, XP002473596.

Mastel Precision: Fiber Optic Ring Illuminator (Product Nos. 3776 & 4050) U.S. Pat. No. 5312393, User Manual. Rev: A02: Jan. 11, 1995, pp. 1-25.

Mastel Precision: The Ring Light. http://www.mastel.com/ring_light.html. Jul. 28, 2003.

Measurement of the wave-front aberration of the eye by a fast psychophysical procedure. He et al. J. Opt. Soc. Am. A, vol. 15, No. 9: Sep. 1998, pp. 2449-2455.

Microstructural Changes in Polyester Biotextiles During Implantation in Humans. King et al. NC State University: JTATM, vol. 1, Issue 3, Spring 2001, pp. 1-8.

Miller et al. "Quantification of the Pinhole effect" Perspectives in Refraction, vol. 21:347-350 1977.

Moran, C., et al. Polyvinylidene flouride polymer applied in an intraocular pressure sensor, Jpn. J. Appl. Phys., 2005, pp. L885-L887, vol. 44, Issue 27.

Near vision, lags of accommodation and myopia. Charman, W. N. Ophthal. Physiol. Opt., vol. 19, No. 2, pp. 126-133, 1999.

New Visual Acuity Charts for Clinical Research. Ferris et al. American Journal of Ophthalmology, 94: 91-96, 1982.

Night myopia and driving. Charman, W. N. Ophthal. Physiol. Opt., vol. 16, No. 6, p. 474-485, 1996.

Notch in contrast sensitivity function of optical origin: diffraction effects of acrylic filters. Irving et al., Ophthal. Physiol. Opt., vol. 13, Apr. 1993: pp. 179-182.

On modeling the causes of presbyopia. Glasser, A. Vision Research 41(2001) 3083-3087.

On the linearity of accommodation dynamics. Charman, W. N. Vision Research 40 (2000) 2057-2066.

Optical Aspects of Tolerances to Uncorrected Ocular Astigmatism. Charman et al. Optometry and Vision Science, vol. 70, No. 2: pp. 111-117, 1993.

Optical Modeling of Contact Lens Performance Final Report Covering Period Jul. 15, 1994-Mar. 31, 1995. Grivenkamp et al. For Pilkington Barnes Hind, Issued Apr. 5, 1995.

Optometric Clinical Practice Guideline Care of the Patient With Presbyopia: Reference Guide for Clinicians. Mancil et al. Mar. 20, 1998.

Ozanics et al., "Prenatal Development of the Eye and its Adnexa," Biomedical Foundation of Opthalmology, 1985, vol. 1, Chap 2, pp. 7-15.

Patel, C.K., et al. "Imaging the macula through a black occlusive intraocular lens". Arch. Ophthalmol. Oct. 2010; 128(10):1374-1376.

PermaVision intracorneal lens shows promise for hyperopia. Kronemyer, Bob. Ocular Surgery News: Jan. 1, 2003; p. 8.

Perspectives in Refraction: Quantification of the Pinhole Effect. Miller et al. Survey of Ophthalmology, vol. 21, No. 4, Jan./Feb. 1977, pp. 347-350.

Peyman et al., "Modification of Rabbit Corneal Curvature with use of Carbon Dioxide Laser Burns," Ophth, Surg., vol. 11, No. 5, 5/80, pp. 325-329.

Puliafito, C., et al., "Excimer Laser Ablator of the Cornea & Lens," Opthalmology, 6/85 vol. 92 No. 6, pp. 741-748.

Sally Pobojewski, "New U-developed laser performs high-precision corneal surgery", News and Information Services, The University Record, Jul. 16, 1997.

Poly(methyl methacrylate) model study of optical surface quality after excimer laser photo refractive keratectomy. Hauge et al. J Cataract Refract Surg., vol. 27, Dec. 2001, pp. 2026-2035.

Prince, S., et al., Sorption of alkylbenzyldimethylammonium chloride homologs to various filter media used in processing ophthalmics, APhA Annual Meeting, 1996, pp. 103, vol. 143.

Procyon: Marketing Information for Distributors: Pupil Measurement and Refractive Surgery (Samples from Academic Papers 1994 and 2002). pp. 1-17.

"Refractive Keratoplasty: Acute Morphologic Features," by Baumgarter et al, The CLAO Journal—Apr. 1985, vol. II, No. 2, pp. 163-169.

Refractive keratoplasty with intrastromal hydrogel lenticular implants. McCarey et al. Invest., Ophthalmol. Vis. ScL, Jul. 1981, pp. 107-115.

Retinal Image Quality in the Human Eye as a Function of the Accommodation. Lopex-Gil et al. Vision Research, vol. 38, No. 19,Jul. 3, 1998, pp. 1-11.

Rosenbloom "The Controlled-Pupil Contact Lens in Low Vision Problems" Journal of the American Optometric Association, pp. 836, 838, 840 1969.

Sato, "A New Surgical Approach to Myopia", Am. J. Ophthalmol. 36:823, 1953.

Shingleton, B., Reply: pupil stretch technique, J. Cataract Refract. Surg., 2007, pp. 362, vol. 33.

Simple parametric model of the human ocular modulation transfer function, A. Deeley et al. Ophthal. Physiol. Opt., vol. 11, Jan. 1991, pp. 91-93.

Karin R. Slettin, MD et al., "An In Vivo Model of Femtosecond Laser Intrastromal Refractive Surgery", Experimental Science, Ophthalmic Surgery and Lasers, Nov./Dec. 1999, vol. 30, No. 9, pp. 742-749.

Subjective Depth-of-Focus of the Eye. Atchison et al. Optometry and Vision Science, vol. 74, No. 7, Jul. 1997, pp. 511-520.

Subjective Sensitivity to Small Changes in the Contrast of a Suprathreshold Grating, The. Walsh et al. Vision Res., vol. 30, No. 1, pp. 163-193, 1990.

Surface Modification Properties of Parylene for Medical Applications, The. Wolgemuth, Lonny.Business Briefing: Medical Device Manfacturing & Technology 2002, pp. 1-4.

Surface tension control of collagen biomaterials by the selective hydrolysis of internal carboxyamides of the protein matrix. Revista Brasileira de Engenharia Biomedica, v. 15, n. 1-2, p. 55-61, Jan./Aug. 1999.

Surgeon: Severe corneal lesions after LASIK are not stage 4 DLK. Piechocki, Michael. Ocular SurgeryNews; Jan. 1, 2003, pp. 16-17.

Subrayan, V., et al., Improving quality of vision with an anterior surface modified prolate intraocular lens: A prosepective clinical trial, Int. J. Ophthalmol., Aug. 2007, pp. 918-920, vol. 7, No. 4.

Swinger et al., "Keratophakia and Keratomileusis—Clinical Results", American Academy of Ophthalmology, Aug. 1981, vol. 88, No. 8, pp. 709-715.

Taboda, J., et al., "Response of the Corneal Epithelium to K.F. Excimer Laser Pulses," Health Physics, 1981, vol. 40, pp. 677-683.

Takahashi, E. "Use and Interpretation of the Pinhole Test" The Optometric Weekly, pp. 83-86 1965.

Tasaki, I., et al., Demonstration of heat production associated with spreading depression in the amphibian retina, Biochem. Biophys. Res. Commun., 1991, pp. 293-297, vol. 174.

Theoretical and practical performance of a concentric bifocal intraocular implant lens. Charman, W.N. Vision Research 38 (1998) 2841-2853.

(56) **References Cited**

OTHER PUBLICATIONS

Trokel, S., et al., "Excimer Laser Surgery of the Cornea," Am. J. Opthalmology, 1983 vol. 96, pp. 710-715.
Use of a digital infrared pupillometer to assess patient suitability for refractive surgery. Rosen et al. J Cataract Refract Surg., vol. 28: Aug. 2002. pp. 1433-1438.
Vision and driving—a literature review and commentary. Charman, W.N. Ophthal. Physiol. Opt., vol. 17, No. 5, pp. 371-391, 1997.
Wesley, N. K. "Research on the Multi-Range Lens," pp. 18-24, 1970.
Yamauchi et al., "Cultivation of fibroblast cells on keratin coated substrata", Polymers for Tissue Engineering, pp. 329-340, VS 1998.
Yusuf, et al., "Inability to perform posterior segment monitoring by scanning laser ophthalmoscopy or optical coherence tomography with some occlusive intraocular lenses in clinical use", J. Cataract Refract. Surg., Mar. 2012, 38: 513-513.
Yusuf, et al., "Occlusive IOLs for Intractable Diplopia Demonstrate a Novel Near-Infrared Window of Transmission for SLO/OCT Imaging and Clinical Assessment". Investigative Ophthalmology & Visual Science, May 2011, 52(6): 3737-3743.
Zavala et al., "Refractive Keratoplosty: Lathing and Cyropreservation," CLAO Journal, Apr. 1985, 11:155-162.
Guyton A.C., Textbook of Medical Physiology, 7th Edition, W.B. Saunders Company, 1986: Chapter 58, pp. 700-710.
International Search Report and Written Opinion for PCT/US2010/045541 mailed Oct. 12, 2010 in 11 pages.
International Search Report and Written Opinion for PCT/US2014/020252 mailed Jul. 7, 2014 in 16 pages.

* cited by examiner

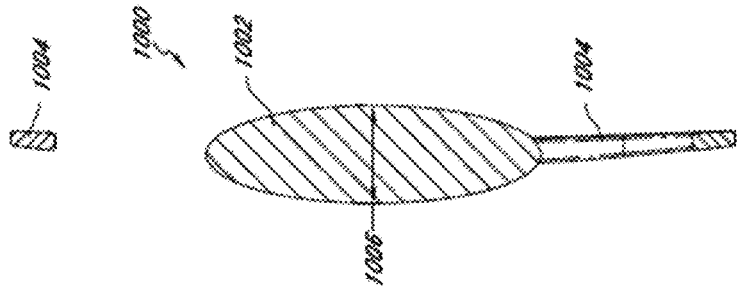

FIG. 1B

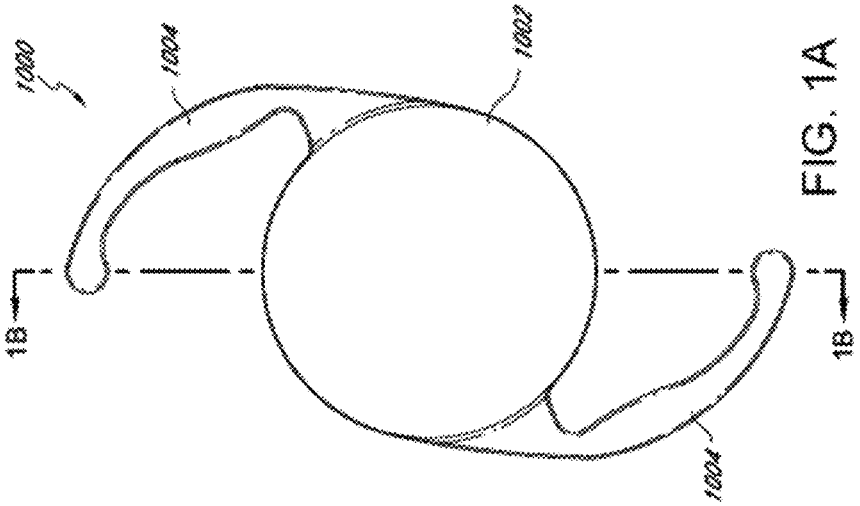

FIG. 1A

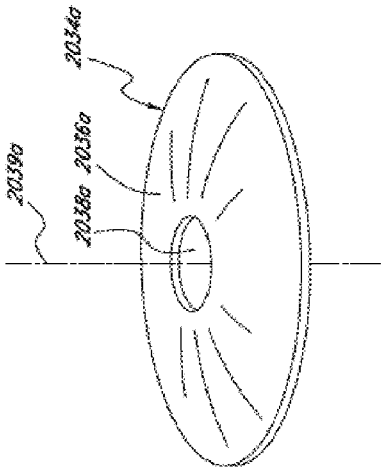

FIG. 2A

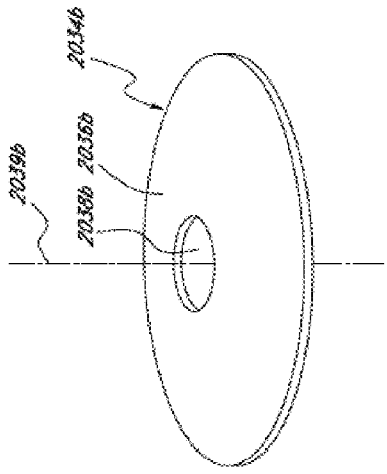

FIG. 2B

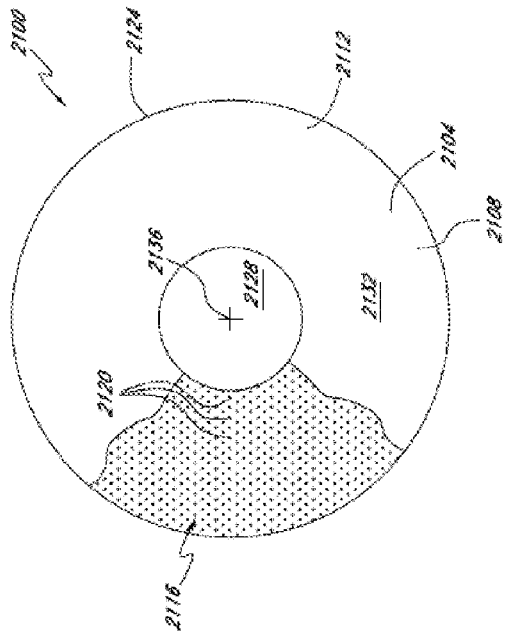

FIG. 3A

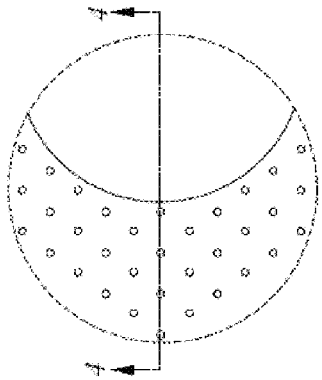

FIG. 3B

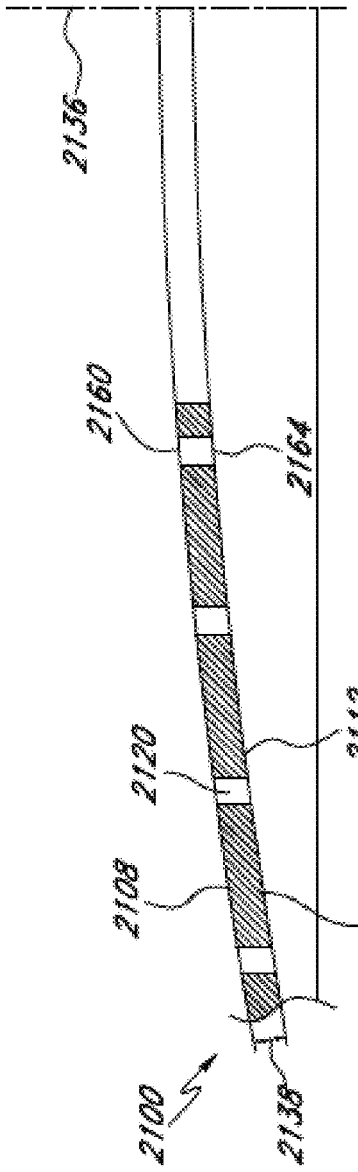

FIG. 4

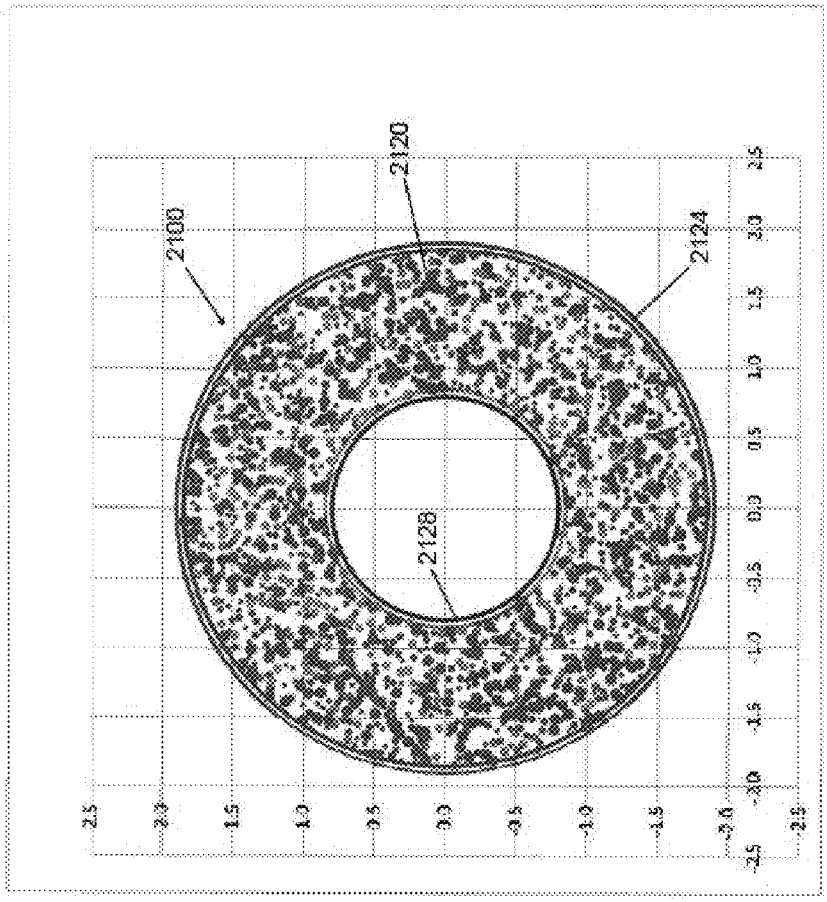

FIG. 5

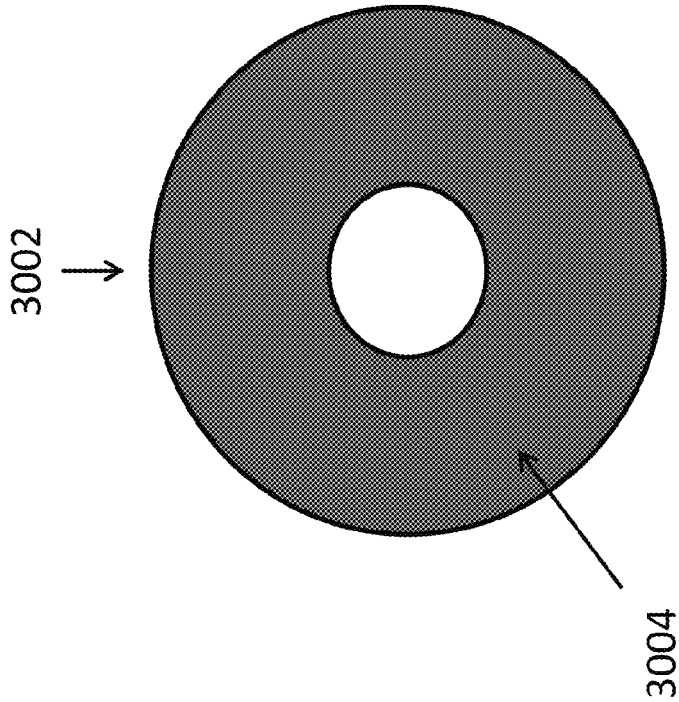

FIG. 6b

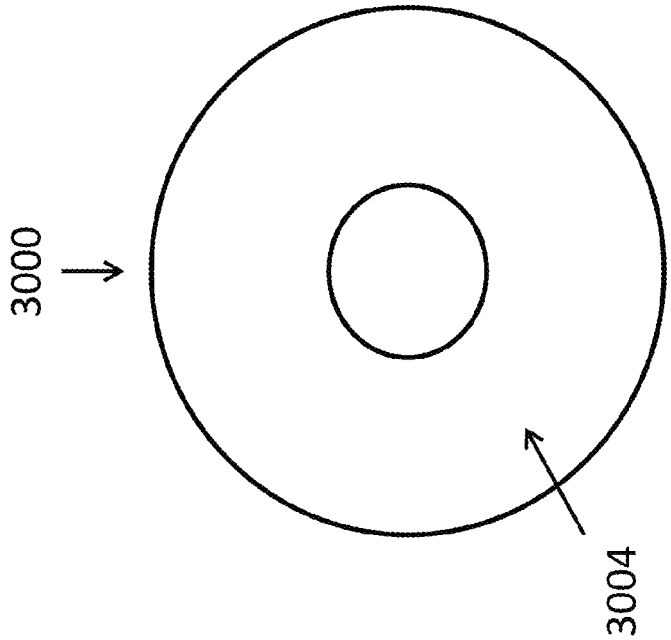

FIG. 6a

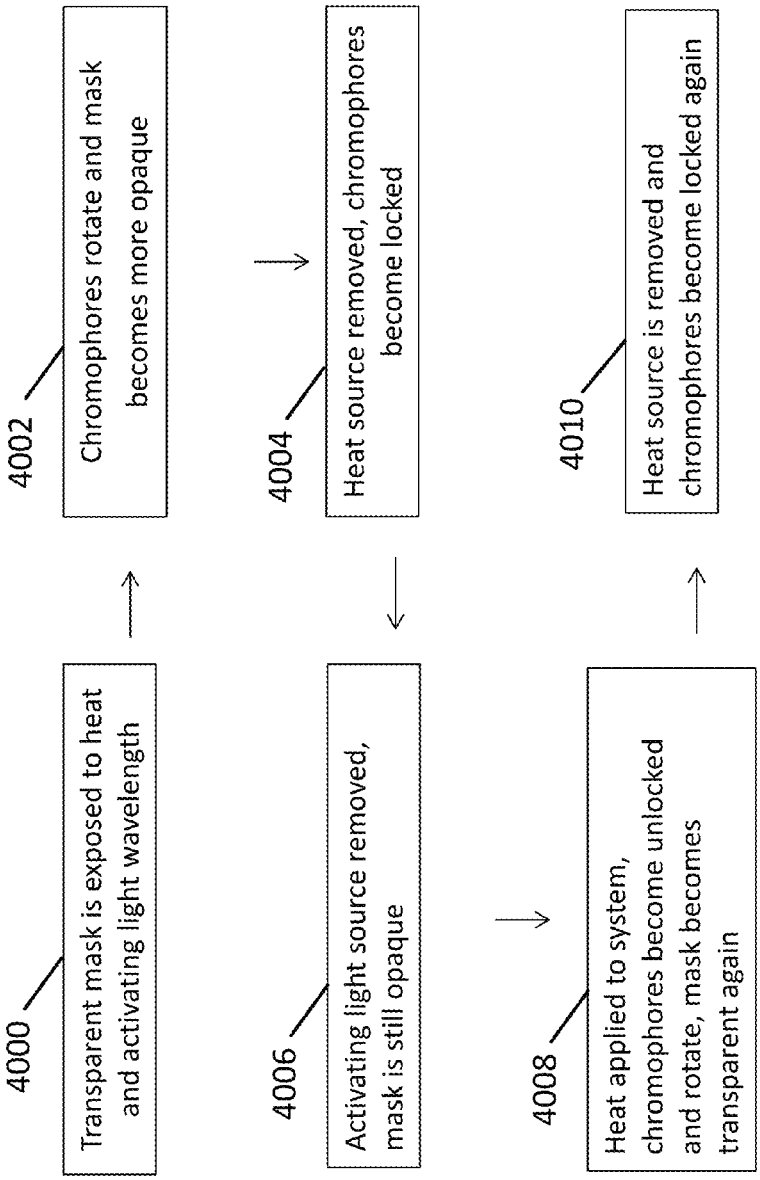
4000
Transparent mask is exposed to heat and activating light wavelength
4002
Chromophores rotate and mask becomes more opaque
4004
Heat source removed, chromophores become locked
4006
Activating light source removed, mask is still opaque
4008
Heat applied to system, chromophores become unlocked and rotate, mask becomes transparent again
4010
Heat source is removed and chromophores become locked again

FIG. 7

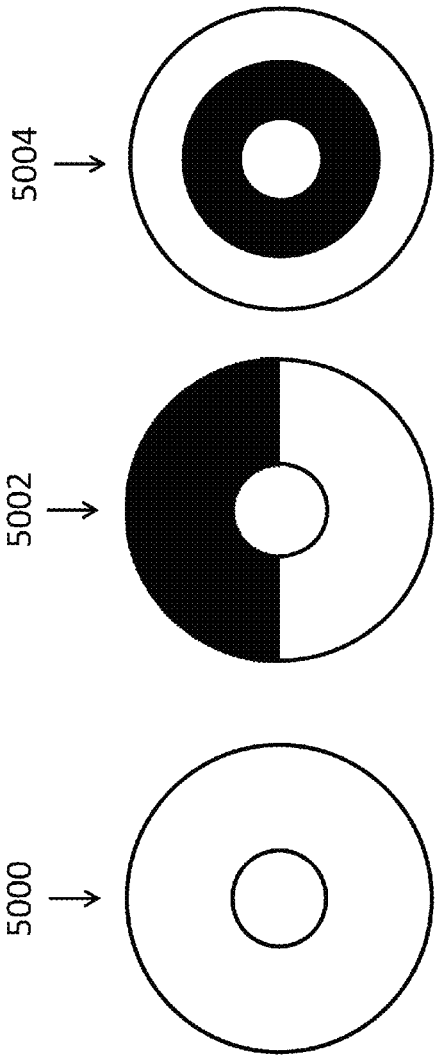

FIG. 8A

FIG. 8B

FIG. 8C

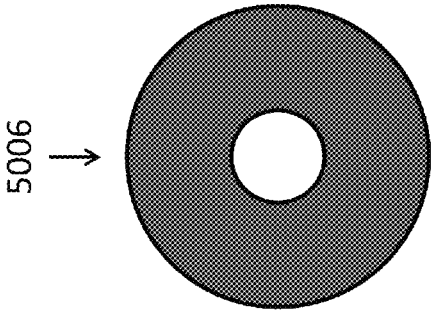

FIG. 8D

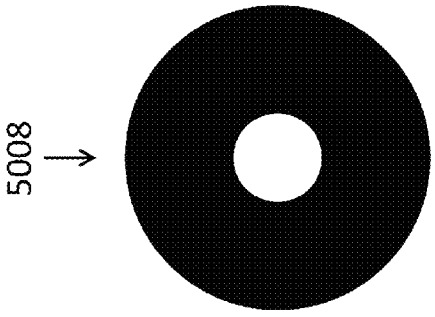

FIG. 8E

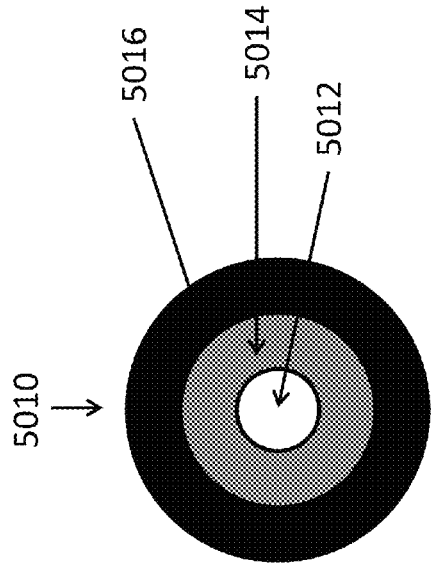

FIG. 8F

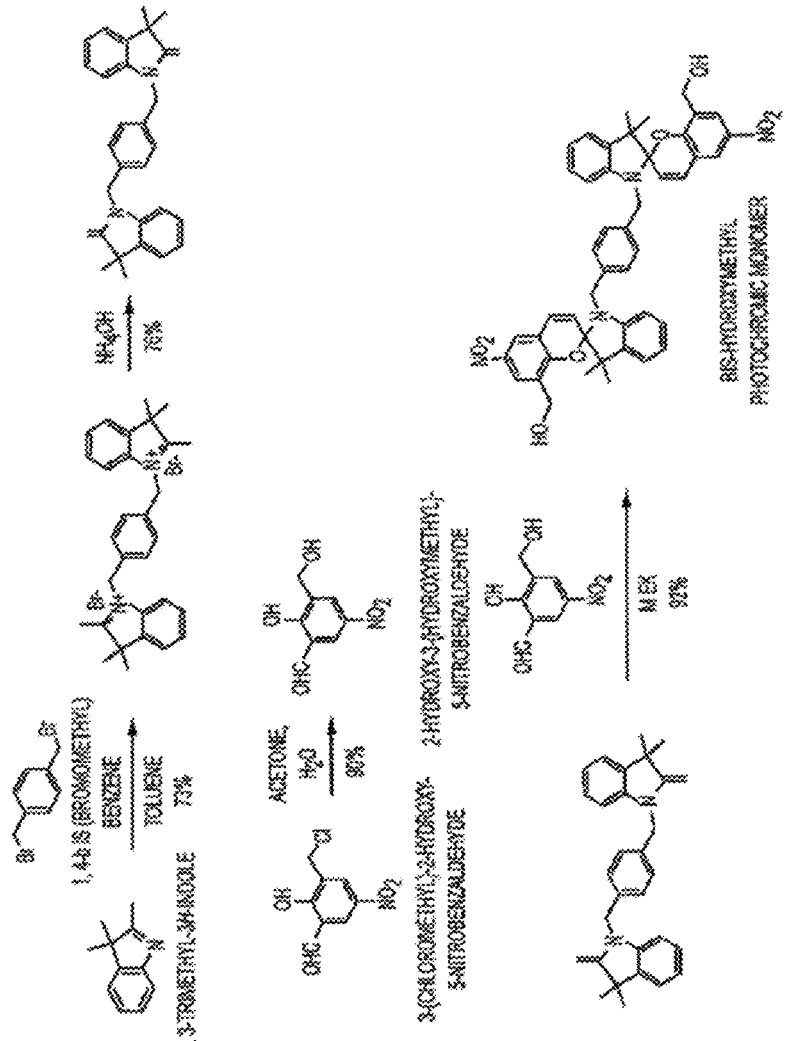
2, 3, 3-TRIMETHYL-3H-INDOLE
1, 4-b IS (BROMOMETHYL)
BENZENE
TOLUENE
73%
ACETONE,
H_2O
90%
3-(CHLOROMETHYL)-2-HYDROXY-5-NITROBENZALDEHYDE
2-HYDROXY-3-(HYDROXYMETHYL)-5-NITROBENZALDEHYDE
MEK
90%
NH_4OH
76%
BIS-HYDROXYMETHYL PHOTOCHROMIC MONOMER

FIG. 9

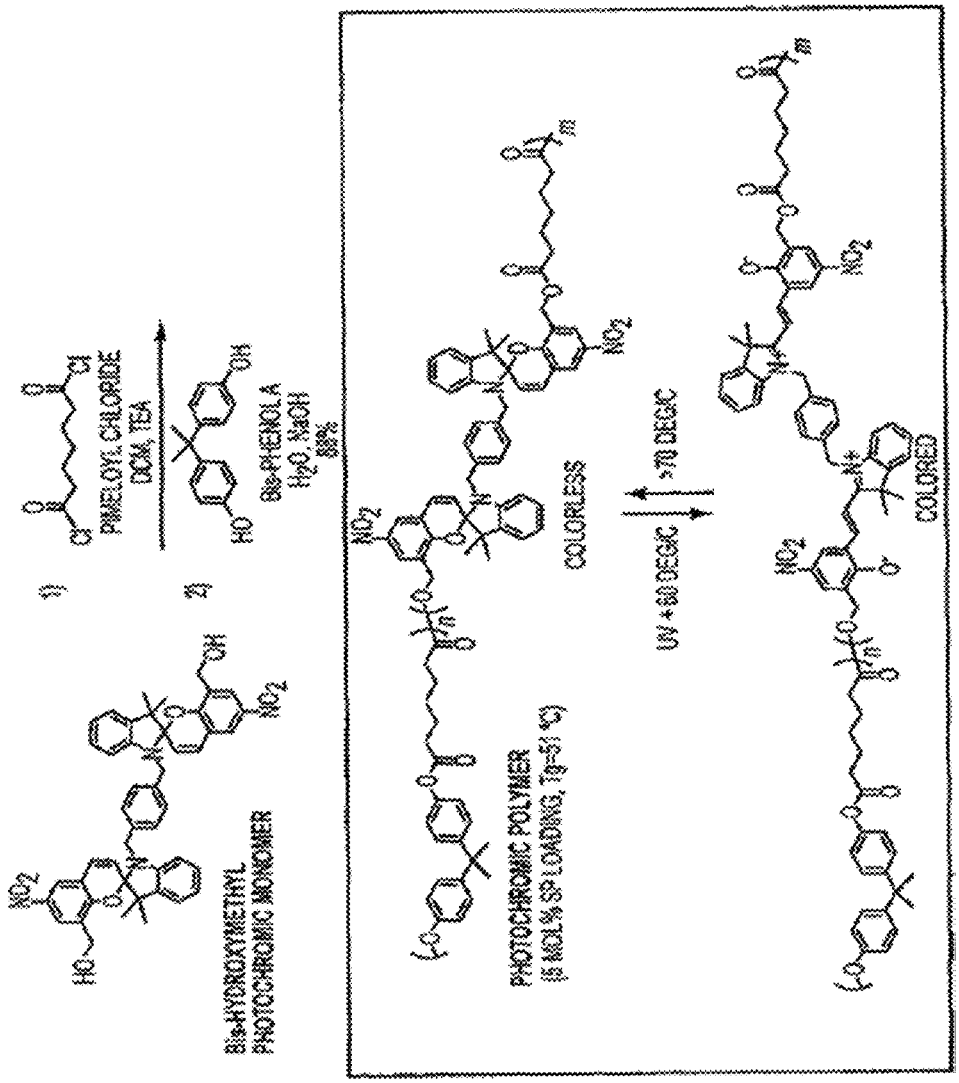
PIMELOYL CHLORIDE
DCM, TEA
Bis-PHENOL A
H2O, NaOH
88%
Bis-HYDROXYMETHYL
PHOTOCHROMIC MONOMER
PHOTOCHROMIC POLYMER
(8 MOL% SP LOADING, Tg=51 °C)
COLORLESS
UV + 60 DEGC
>70 DEGC
COLORED

FIG. 10

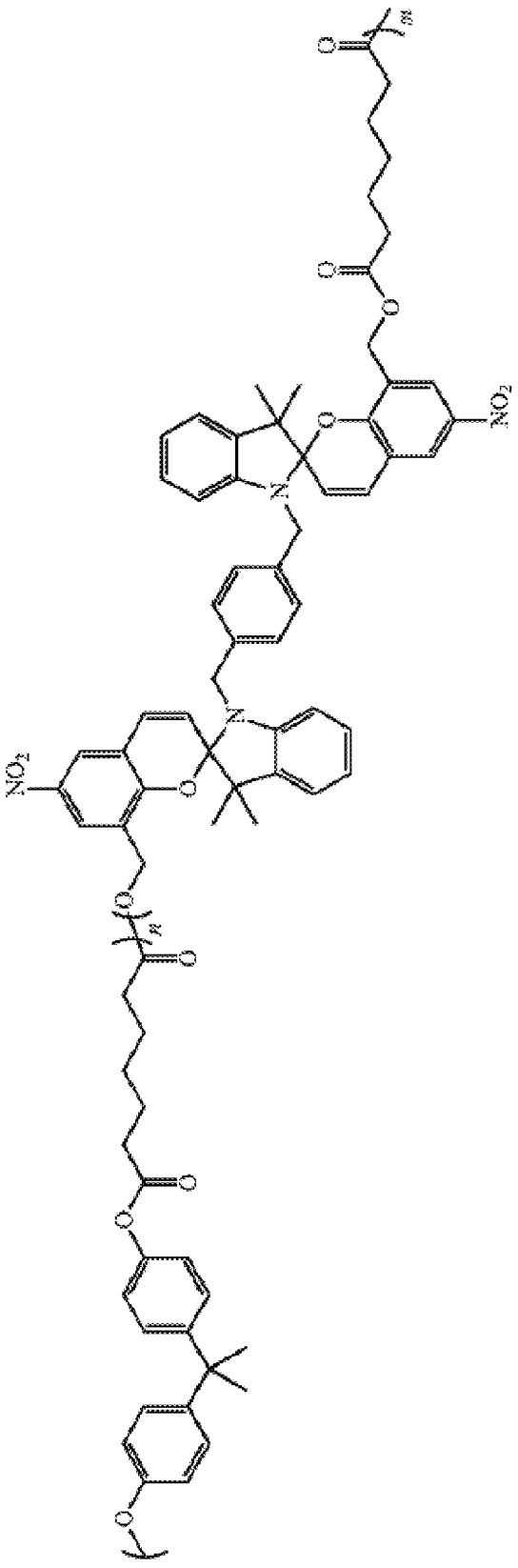

FIG. 11

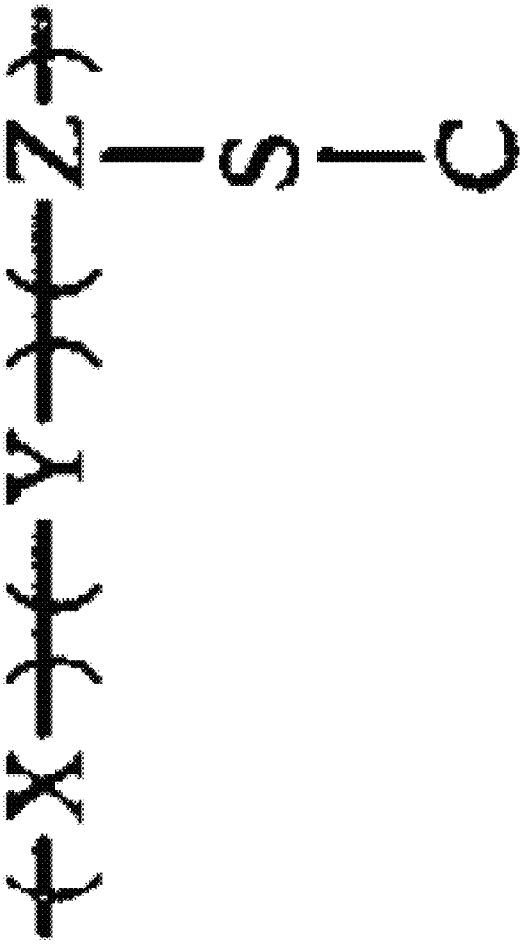

FIG. 12

IN SITU ADJUSTABLE OPTICAL MASK

BACKGROUND OF THE INVENTION

1. Field

This application relates generally to the field of ophthalmic devices. More particularly, this application is directed to corneal masks and intraocular implants, and methods of making the same.

2. Description of the Related Art

The human eye functions to provide vision by transmitting and focusing light through a clear outer portion called the cornea, and further refining the focus of the image onto a retina by way of a crystalline lens. The quality of the focused image depends on many factors including the size and shape of the eye, and the transparency of the cornea and the lens.

The optical power of the eye is determined by the optical power of the cornea and the crystalline lens. In a normal, healthy eye, sharp images of distant objects are formed on the retina (emmetropia). In many eyes, images of distant objects are either formed in front of the retina because the eye is abnormally long or the cornea is abnormally steep (myopia), or formed in back of the retina because the eye is abnormally short or the cornea is abnormally flat (hyperopia). The cornea also can be asymmetric or toric, resulting in an uncompensated cylindrical refractive error referred to as corneal astigmatism.

A normally functioning human eye is capable of selectively focusing on either near or far objects through a process known as accommodation. Accommodation is achieved by inducing deformation in a lens located inside the eye, which is referred to as the crystalline lens. Such deformation is induced by muscles called ciliary muscles. In most individuals, the ability to accommodate diminishes with age and these individuals cannot see up close without vision correction. If far vision also is deficient, such individuals are usually prescribed bifocal lenses.

SUMMARY OF THE INVENTION

For purposes of summarizing the disclosure, certain aspects, advantages and novel features of the invention have been described herein. It is to be understood that not necessarily all such advantages can be achieved in accordance with any particular embodiment of the inventions disclosed herein. Thus, the inventions disclosed herein can be embodied or carried out in a manner that achieves or optimizes one advantage or group of advantages as taught herein without necessarily achieving other advantages as can be taught or suggested herein.

A first aspect of this application is directed toward an ophthalmic device comprising a mask configured to transmit substantially all visible light along an optical axis of the eye, the mask further comprising a transition portion configured to switch between at least a first degree of opacity and a second degree of opacity; and wherein the transition portion comprises a photochromic chromophore within a polymer matrix.

The mask may include an aperture configured to transmit substantially all visible light along the optical axis of the eye.

The mask may include a plurality of holes extending at least partially between an anterior surface of the mask and a posterior surface of the mask.

An intraocular lens may be coupled with the mask.

The first degree of opacity may allow transmission of substantially all visible light through the transition portion of the mask.

The second degree of opacity may prevent transmission of substantially all visible light through the transition portion of the mask.

The transition portion of the mask may comprise at least 50% of the total mask.

The transition portion may be configured to switch between a first degree of opacity and a second degree of opacity via application of both light and heat.

The polymer matrix may have a glass transition temperature of between 30-150° C.

The photochromic chromophore may comprise spiropyran.

Another aspect of this application is directed toward a method of switching the opacity of at least a portion of an ophthalmic device. The method includes providing a photochromic polymer mask with a controlled glass transition temperature, inserting the mask into an eye, and applying light and heat to the mask.

The heat may be applied via a laser, via ultrasonic energy or other energy modality for elevating the temperature of the mask.

A microscope can be used to monitor the photochromic polymer mask.

The glass transition temperature may be controlled by altering the chain length of the polymer.

The glass transition temperature may be controlled by altering the cross-link density of the polymer.

Another aspect of this application is directed toward a method of forming a mask portion. The mask includes a transition portion configured to switch between a first degree of opacity and a second degree of opacity and an aperture in the mask portion, the aperture configured to transmit substantially all visible light along an optical axis of an eye.

The method may include forming a plurality of holes in the mask portion, the plurality of holes extending at least partially between an anterior surface and a posterior surface of the mask.

The method may include coupling the mask portion with an intraocular lens.

The transition portion may include a photochromic chromophore contained within a polymer matrix.

BRIEF DESCRIPTION OF THE DRAWINGS

Various embodiments will be described hereinafter with reference to the accompanying drawings. These embodiments are illustrated and described by example only, and are not intended to limit the scope of the disclosure. In the drawings, similar elements have similar reference numerals.

FIGS. **1**A and **1**B depict a conventional intraocular lens.

FIG. **2**A is a perspective view of one embodiment of a mask.

FIG. **2**B is a perspective view of another embodiment of a mask.

FIG. **3**A depicts a top view of another embodiment of a mask configured to increase depth of focus.

FIG. **3**B depicts an enlarged view of a portion of the view of **3**B.

FIG. **4** is a cross-sectional view of the mask of FIG. **3**B taken along the section plane **4**-**4**.

FIG. **5** is a graphical representation of one arrangement of holes of a plurality of holes that can be formed in an ophthalmic device.

FIGS. **6**A and **6**B depict an embodiment of a mask that switches between one level of opacity and another level of opacity.

FIG. **7** is a flowchart that depicts one embodiment of a method for switching the opacity of a transition portion of a mask.

FIGS. **8**A-**8**F depict multiple embodiments of various geometries of the transition portions of a mask.

FIG. **9** depicts one embodiment of the synthesis of a photochromic monomer.

FIG. **10** depicts one embodiment of the synthesis of a photochromic polymer from the monomer of FIG. **9**.

FIG. **11** depicts one embodiment of a general formula for a photochromic polymer.

FIG. **12** depicts one embodiment of a side-chain crystallizable polymer.

DETAILED DESCRIPTION

This application is directed to ocular devices and implants (e.g., masks) for improving the depth of focus of an eye of a patient and methods and apparatuses for making such ocular devices. The masks generally employ small-aperture vision correction methods to enhance depth of focus in a presbyopic eye thereby providing functional near vision. The masks can be applied to the eye in any manner and in any anterior-posterior location along the optical path, e.g., as an implant in the cornea (sometimes referred to as a "corneal inlay"). The masks can also be embodied in or combined with lenses and applied in other regions of the eye, e.g., as or in combination with contact lenses or intraocular lenses (IOL).

The ocular devices and masks described herein can be applied to masks and/or combined with features described in U.S. Patent Publication No. 2011/0040376, filed Aug. 13, 2010, entitled "MASKED INTRAOCULAR IMPLANTS AND LENSES," and International Patent Publication No. WO 2011/020074, filed Aug. 13, 2010, entitled "CORNEAL INLAY WITH NUTRIENT TRANSPORT STRUCTURES, hereby incorporated by reference in their entirety."

A conventional intraocular lens **1000** is illustrated in FIGS. **1**A-B. The cross-sectional thickness of the lens body **1002** is generally dependent on the optical power of the intraocular lens **1000** and the material of the lens body **1002**. In particular, the central region of the lens body **1002** is generally the thickest section of the intraocular lens **1000** with a central region cross-sectional thickness **1006**. Methods for reducing the thickness of the intraocular lens are described in U.S. Pub. No. 2011/0040376, filed Aug. 13, 2010, hereby incorporated by reference in its entirety.

The intraocular lens and/or the lens body can be made from one or more materials. In certain embodiments, the intraocular lens and/or the lens body can comprise polymers (e.g. PMMA, PVDF, polypropylene, polycarbonate, PEEK, polyethylene, acrylic copolymers, polystyrene, PVC, polysulfone), hydrogels, and silicone).

A variety of variations of masks that can be used alone or positioned on or within the implant body are discussed herein, and also described in U.S. Pat. No. 7,628,810, U.S. Patent Publication No. 2006/0113054, and U.S. Patent Publication No. 2006/0265058, all of which are hereby incorporated by reference in their entirety. FIG. **2**A illustrates one embodiment of a mask **2034***a*. The mask **2034***a* can include an annular region **2036***a* surrounding an aperture **2038***a* substantially centrally located on the mask **2034***a*. The aperture **2038***a* can be generally located around a central axis **2039***a*, referred to herein as the optical axis of the mask **2034***a*. The aperture **2038***a* can be in the shape of a circle. FIG. **2**B illustrates another embodiment of a mask **2034***b* similar to the mask **2034***a* illustrated in FIG. **2**A. The annular region **2036***a* of the mask **2034***a* of FIG. **2**A has a curvature from the outer periphery to the inner periphery of the annular region **2036***a*, such that the annular region **2036***a* substantially conforms to the surface of a geometry of rotation, such as a sphere. The annular region **2036***b* of the mask **2034***b* of FIG. **2**B is substantially flat.

The mask can have a constant thickness. However, in some embodiments, the thickness of the mask can vary between the inner periphery (near the aperture **2038***a,b*) and the outer periphery.

The mask can have dimensions configured to improve a patient's vision. For example, if the mask is embedded within the implant body, the thickness of the mask can vary depending on the location of the mask relative to the implant body. For example, the mask can have a thickness greater than zero and less than the thickness of the implant body. Alternatively, if the mask is coupled to a surface of the implant body, the mask can preferably have a thickness no greater than necessary to have desired opacity so that the mask does not add additional thickness to the intraocular lens. In certain embodiments, the mask has a thickness of greater than zero and less than about 0.5 mm. In some embodiments, the mask has a thickness of at least about 0.25 mm and/or less than or equal to about 0.3 mm. In some embodiments, the mask has a thickness of at least 0.005 mm and/or less than or equal to about 0.015 mm. In one embodiment, the mask has a thickness of about 0.25 mm. If the mask is on or near the surface of a transition zone, as described in U.S. Pub. No. 2011/0040376, filed Aug. 13, 2010 and hereby incorporated by reference in its entirety, the mask can have a shape similar or the same as the transition zone.

The annular region **2036***a,b* can be at least partially opaque or can be completely opaque to visible light. The degree of opacity of the annular region **2036***a,b* prevents at least some or substantially all light from being transmitted through the mask **2034***a,b*. Generally, transmission of light through the annular region will be no more than about 5%, often no more than about 3% and in some applications, no more than about 1%. Opacity of the annular region **2036***a,b* can be achieved in any of several different ways.

For example, in one embodiment, the material used to make mask **2034***a,b* can be naturally opaque. Alternatively, the material used to make the mask **2034***a,b* can be substantially clear, but treated with a dye or other pigmentation agent to render region **2036** substantially or completely opaque. In still another example, the surface of the mask **2034** can be treated physically or chemically (such as by etching) to alter the refractive and transmissive properties of the mask **2034***a,b* and make it less transmissive to light.

The material of the mask **2034***a,b* can be, for example, any of a variety of polymeric materials. Where the mask **2034***a,b* is applied to or fixed within the intraocular implant, the material of the mask **2034** should be biocompatible. Examples of suitable materials for the mask **2034** *a,b* include the preferred PVDF, other suitable polymers or co-polymers, such as hydrogels, or fibrous materials, such as a Dacron mesh.

In additional embodiments, a photochromic material can be used as the mask or as a variable transmission zone in addition to a non-photochromic or non-variable transmission zone of the mask. Under bright light conditions, the photochromic material can darken thereby creating a mask (having a transmission aperture) and enhancing near vision. Under dim light conditions, the photochromic material lightens, which allows more light to pass through to the retina. In certain embodiments, under dim light conditions, the photochromic material lightens to expose an optic of the intraocular implant. Further photochromic material details are disclosed

in U.S. patent application Ser. No. 13/691,625, filed Nov. 30, 2012, which is hereby incorporated by reference in its entirety.

The mask can have different degrees of opacity. For example, the mask can block substantially all of visible light or can block a portion of visible light. The opacity of the mask can also vary in different regions of the mask. In certain embodiments, the opacity of the outer edge and/or the inner edge of the mask is less than the central region of the mask. The opacity in different regions can transition abruptly or have a gradient transition. Additional examples of opacity transitions can be found in U.S. Pat. Nos. 5,662,706, 5,905,561 and 5,965,330, all of which are hereby incorporated by reference in their entirety.

Further mask details are disclosed in U.S. Pat. No. 4,976,732, issued Dec. 11, 1990, U.S. Pat. No. 7,628,810, issued Dec. 8, 2009, and in U.S. patent application Ser. No. 10/854,032, filed May 26, 2004, all of which are hereby incorporated by reference in their entirety.

An advantage to embodiments that include a mask with an aperture (e.g., pin-hole aperture) described herein over multifocal IOLs, contact lenses, or refractive treatments of the cornea is that all of these latter approaches divide the available light coming through the aperture into two or more foci while a mask approach has a single focus (monofocal). This limitation forces designers of multifocal optics to choose how much of the light is directed to each focal point, and to deal with the effects of the unfocused light that is always present in any image. In order to maximize acuity at the important distances of infinity (>6M) and 40 cm (normal reading distance), it is typical to provide little or no light focused at an intermediate distance, and as a result, visual acuity at these distances is poor. With a mask that includes an aperture to increase depth-of-focus, however, the intermediate vision of presbyopic patients is improved significantly. Indeed, the defocus blur with the aperture is less at intermediate distances than at near.

FIGS. **3-4** show another embodiment of a mask **2100** configured to increase depth of focus of an eye of a patient with presbyopia. The mask **2100** is similar to the masks hereinbefore described, except as described differently below. The mask **2100** can be made of the materials discussed herein, including those discussed above. In addition, the mask **2100** can be formed by any suitable process. The mask **2100** is configured to be applied to an IOL.

In one embodiment, the mask **2100** includes a body **2104** that has an anterior surface **2108** and a posterior surface **2112**. The body **2104** can be formed of any suitable material, including at least one of an open cell foam material, an expanded solid material, and a substantially opaque material. In one embodiment, the material used to form the body **2104** has relatively high water content. In other embodiments, the materials that can be used to form the body **2104** include polymers (e.g. PMMA, PVDF, polypropylene, polycarbonate, PEEK, polyethylene, acrylic copolymers (e.g., hydrophobic or hydrophilic), polystyrene, PVC, polysulfone), hydrogels, silicone, metals, metal alloys, or carbon (e.g., graphene, pure carbon).

In one embodiment, the mask **2100** includes a hole arrangement **2116**. The hole arrangement **2116** can comprise a plurality of holes **2120**. The holes **2120** are shown on only a portion of the mask **2100**, but the holes **2120** preferably are located throughout the body **2104** in one embodiment. The mask **2100** has an outer periphery **2124** that defines an outer edge of the body **2104**. In some embodiments, the mask **2100** includes an aperture **2128** at least partially surrounded by the outer periphery **2124** and a non-transmissive or reduced transmissive portion **2132** located between the outer periphery **2124** and the aperture **2128**.

Preferably the mask **2100** is symmetrical, e.g., rotationally symmetrical about a mask axis **2136**. In one embodiment, the outer periphery **2124** of the mask **2100** is circular. The mask in general has an outer diameter of at least about 3 mm and/or less than about 6 mm. In some embodiments, the mask is circular and has a diameter of at least about 3 mm and/or less than or equal to about 4 mm. In some embodiments, the mask **2100** is circular and has a diameter of about 3.2 mm. In some embodiments, masks that are asymmetrical or that are not symmetrical about a mask axis provide benefits, such as enabling a mask to be located or maintained in a selected position with respect to the anatomy of the eye.

The body **2104** of the mask **2100** can be configured to be coupled with a particular intraocular lens design, either of reduced thickness design or of conventional design. For example, where the mask **2100** is to be coupled with a particular IOL that has curvature, the body **2104** can be provided with a corresponding amount of curvature along the mask axis **2136** that corresponds to the curvature. Likewise, the body **2104** can be provided with corresponding shape to accommodate IOL transition zones. Further details about the reduced thickness design are described in U.S. Pub. No. 2011/0040376, filed Aug. 13, 2010 and hereby incorporated by reference in its entirety.

In one embodiment, one of the anterior surface **2108** and the posterior surface **2112** of the body **2104** is substantially planar. In one planar embodiment, very little or no uniform curvature can be measured across the planar surface. In another embodiment, both of the anterior and posterior surfaces **2108**, **2112** are substantially planar. In general, the thickness of the body **2104** of the mask **2100** can be within the range of from greater than zero to about 0.5 mm, about 1 micron to about 40 microns, and often in the range of from about 5 microns to about 20 microns. In some embodiments, the body **2104** of the mask **2100** has a thickness **2138** of at least about 5 microns and/or less than or equal to about 20 microns. In some embodiments, the body **2104** of the mask has a thickness **2138** of at least about 10 microns and/or less than or equal to about 15 microns. In certain embodiments, the thickness **2138** is about 15 microns. In certain embodiments, the thickness **2138** is about 10 microns. In certain embodiments, the thickness **2138** of the mask **2100** is about 5 microns. In another embodiment, the thickness **2138** of the mask **2100** is about 8 microns. In another embodiment, the thickness **2138** of the mask **2100** is about 10 microns.

A substantially planar mask has several advantages over a non-planar mask. For example, a substantially planar mask can be fabricated more easily than one that has to be formed to a particular curvature. In particular, the process steps involved in inducing curvature in the mask **2100** can be eliminated.

The aperture **2128** is configured to transmit substantially all incident light along the mask axis **2136**. The non-transmissive portion **2132** surrounds at least a portion of the aperture **2128** and substantially prevents transmission of incident light thereon. As discussed in connection with the above masks, the aperture **2128** can be a through-hole in the body **2104** or a substantially light transmissive (e.g., transparent) portion thereof. The aperture **2128** of the mask **2100** generally is defined within the outer periphery **2124** of the mask **2100**. The aperture **2128** can take any of suitable configurations, such as those described above.

In one embodiment, the aperture **2128** is substantially circular and is substantially centered in the mask **2100**. The size of the aperture **2128** can be any size that is effective to

increase the depth of focus of an eye of a patient with presbyopia. In particular, the size of the aperture **2128** is dependent on the location of the mask within the eye (e.g., distance from the retina). In some embodiments, the aperture **2128** can have a diameter of at least about 0.85 mm and/or less than or equal to about 2.2 mm. In certain embodiments, the diameter of the aperture **2128** is less than about 2 mm. In some embodiments, the diameter of the aperture is at least about 1.1 mm and/or less than or equal to about 1.6 mm. In a further embodiment, the diameter of the aperture is at least about 1.3 mm and/or less than or equal to about 1.4 mm.

In certain embodiments, the aperture **2128** includes an optical power and/or refractive properties. For example, the aperture **2128** can include an optic and can have an optical power (e.g. positive or negative optical power). In certain embodiments, the aperture **2128** can add to the active correction of the intraocular lens.

The non-transmissive portion **2132** is configured to prevent transmission of visible light through the mask **2100**. For example, in one embodiment, the non-transmissive portion **2132** prevents transmission of substantially all of at least a portion of the spectrum of the incident visible light. In one embodiment, the non-transmissive portion **2132** is configured to prevent transmission of substantially all visible light, e.g., radiant energy in the electromagnetic spectrum that is visible to the human eye. The non-transmissive portion **2132** can substantially prevent transmission of radiant energy outside the range visible to humans in some embodiments.

As discussed above, preventing transmission of light through the non-transmissive portion **2132** decreases the amount of light that reaches the retina and the fovea that would not converge at the retina and fovea to form a sharp image. As discussed above, the size of the aperture **2128** is such that the light transmitted therethrough generally converges at the retina or fovea. Accordingly, a much sharper image is presented to the retina than would otherwise be the case without the mask **2100**.

In one embodiment, the non-transmissive portion **2132** prevents transmission of at least about 90 percent of incident light. In another embodiment, the non-transmissive portion **2132** prevents transmission of at least about 95 percent of all incident light. The non-transmissive portion **2132** of the mask **2100** can be configured to be substantially opaque to prevent the transmission of light.

In some embodiments, the non-transmissive portion **2132** can transmit no more than about 5% of incident visible light. In some embodiments, the non-transmissive portion **2132** can transmit no more than about 3% of incident visible light. In some embodiments, the non-transmissive portion **2132** can transmit no more than about 2% of incident visible light. In one embodiment, at least a portion of the body **2104** is configured to be opaque to more than 99 percent of the light incident thereon.

As discussed above, the non-transmissive portion **2132** can be configured to prevent transmission of light without absorbing the incident light. For example, the mask **2100** could be made reflective or could be made to interact with the light in a more complex manner, as discussed in U.S. Pat. No. 6,554,424, issued Apr. 29, 2003, which is hereby incorporated by reference in its entirety.

As discussed above, the mask **2100** can include a plurality of holes **2120**. The lens body can extend at least partially through the holes, thereby creating a bond (e.g. material "bridge") between the lens body on either side of the mask.

The holes **2120** of the mask **2100** shown in FIG. **3**A can be located anywhere on the mask **2100**. In some embodiments, substantially all of the holes are in one or more regions of a mask. The holes **2120** of FIG. **3**A extend at least partially between the anterior surface **2108** and the posterior surface **2112** of the mask **2100**. In one embodiment, each of the holes **2120** includes a hole entrance **2160** and a hole exit **2164**. The hole entrance **2160** is located adjacent to the anterior surface **2108** of the mask **2100**. The hole exit **2164** is located adjacent to the posterior surface **2112** of the mask **2100**. In one embodiment, each of the holes **2120** extends the entire distance between the anterior surface **2108** and the posterior surface **2112** of the mask **2100**. Further details about possible hole patterns are described in WO 2011/020074, filed Aug. 13, 2010, incorporated by reference above.

In some embodiments, the mask **2100** can include an annular region near the outer periphery **2124** of the mask having no holes. In certain embodiments, there are no holes within 0.1 mm of the outer periphery **2124** of the mask **2100**.

In some embodiments, the mask can include an annular region around the inner periphery of the mask having no holes. In certain embodiments, there are no holes within 0.1 mm of the aperture **2128**.

As shown in FIG. **5**, the mask **2100** can include a plurality of holes **2120**. In some embodiments, the holes **2120** each have a same diameter. In certain embodiments, the holes **2120** can include one or more different diameters. In some embodiments, the diameter of any single hole **2120** is at least about 0.01 mm and/or less than or equal to about 0.02 mm. In some embodiments, the diameter of the holes **2120** can include one or more of the following hole diameters: 0.010 mm, 0.013 mm, 0.016 mm, and/or 0.019 mm.

In some embodiments, the holes are interspersed at irregular locations throughout at least a portion of the mask **2100**. In some embodiments, holes of different diameters are evenly interspersed throughout at least a portion of the mask **2100**. For example, the mask **2100** can include a plurality of non-overlapping hole regions. The sum of the surface area of the plurality of non-overlapping hole regions can equal to total surface area of the entire hole region of the mask. Each region of the plurality of regions can include a number of holes, each of the holes having a different diameter. The number of holes in each region can equal the number of different hole sizes in the entire hole region.

In some embodiments, there are at least about 1000 holes and/or less than or equal to about 2000 holes. In some embodiments, there are at least about 1000 holes and/or less than or equal to about 1100 holes. In some embodiments, there are about 1040 holes. In some embodiments, there are an equal number of holes of each diameter. In some embodiments, the number of holes having each diameter is different.

FIG. **6**A-**6**B depicts one embodiment of a switchable mask where at least a portion of the mask, hereby referred to as the transition portion, is configured to switch between different levels of opacity to allow different amounts of light to pass through the mask. For example, the transition portion can switch between lower degrees of opacity **3000** to higher degrees of opacity **3002**. In this illustrative embodiment, the mask contains photochromic chromophores within a polymer matrix **3004**. Although initially substantially colorless, when the photochromic chromophores are allowed to freely rotate and are further exposed to certain activating wavelengths of light, the molecules will rotate into a conformation that absorbs some amount of visible light. However, when the activating light source is removed, the molecules will relax and return to a substantially colorless state. It is particularly advantageous to lock these molecules into one state or another, to prolong the visible light blocking aspect of the molecules. Further, it is advantageous to be able to controllably switch the chromophores between a locked colorless

state, wherein visible light can be freely transmitted, to a locked state that absorbs visible light and back again.

In certain embodiments, the free rotation of the photochromic chromophores can be prevented by using particular mask materials such as a photochromic polymer, wherein photochromic chromophores are contained within a polymer matrix. To further control the rotation of the photochromic chromophores, such a polymer matrix can have a controlled glass transition temperature (Tg), such that when heat is applied to the polymer matrix, the matrix undergoes a glass transition from a brittle to a more molten or rubber-like state. While in the more brittle state, the polymer matrix prevents free rotation of the photochromic chromophore, locking the photochromic chromophore into a colorless or a light-absorbing state. However, when in the less brittle, more molten state, the polymer matrix allows free rotation of the photochromic chromophore between colorless or light-absorbing states. Consequently, in this embodiment, a mask can be configured to switch between a state with one degree of opacity to a state with another degree of opacity, through the simple application of heat and activating light.

FIG. **7** is a flowchart illustrating an embodiment of a method for controlling the opacity of a photochromic polymer mask configured to switch between different levels of opacity. At step **4000**, a switchable mask implanted in the eye is exposed to both heat and an activating light source. The exposure to heat causes the polymer matrix to undergo a glass transition while the light activation of the photochromic chromophores causes the molecules to rotate and absorb visible light, causing the transition portion on the mask to become more opaque **4002**. In step **4004**, the heat source is removed and the polymer matrix undergoes a glass transition back to a more brittle form, thus locking in the light-absorbing photochromic chromophores so that they can no longer rotate, resulting in retention of the enhanced opacity of the transition portion. In step **4006**, the activating light source is removed; however the mask remains opaque because the energy-activated photochromic chromophores are not able to freely rotate back into a relaxed colorless state. In optional step **4008**, heat is again applied to the mask, causing the polymer matrix to again undergo a glass transition. This glass transition allows the photochromic chromophores to freely rotate back into their relaxed, colorless state, causing the mask to become less opaque. In optional step **4010**, the heat source is removed from the mask and the polymer matrix undergoes a glass transition back to a more brittle state, locking the photochromic chromophores into a non-rotatable state. Thus, in this example, the mask has been switched from a state with one degree of opacity to a state with another degree of opacity and back again, by the application of heat and activating light.

In some embodiments, a mask configured to controllably switch between different levels of opacity is advantageous because it can allow treatment providers to inspect the back of the eye without requiring the removal of the mask. Further, in certain embodiments, such a feature can allow for switchable changes in mask geometry from outside the eye, potentially allowing for the adjustment of the masks from a first opacity to a second different opacity for various treatments or performance objectives.

In some embodiments, the transition portion of the mask can comprise any proportion of the total mask, ranging from above 0% to 100% of the mask. For example, the transition portion can be at least about 1%, at least about 5%, at least about 10%, at least about 15%, at least about 20%, at least about 25%, at least about 30%, at least about 35%, at least about 40%, at least about 45%, at least about 50%, at least about 55%, at least about 60%, at least about 65%, at least about 70%, at least about 75%, at least about 80%, at least about 90%, or about 100% of the total area of the opaque portion of the mask.

In certain embodiments, the transition portion can switch between a first level of opacity that blocks the transmittance of substantially all light and a second level of opacity where substantially all light can pass through the mask. In some embodiments, the mask can be configured to switch between any level of opacity ranging from above 0 to 100%, corresponding to blocking between 0% to 100% of visible light, respectively. For example, the change in the level of opacity between the first level and the second level can be at least about 5%, at least about 10%, at least about 15%, at least about 20%, at least about 30%, at least about 40%, at least about 50%, at least about 60%, at least about 70%, at least about 80%, or more.

FIGS. **8**A-**8**F depict embodiments of various geometric configurations for the transition portion of the mask. For example, the switchable portion of the mask can switch between a uniform high transmission **5000** (FIG. **8**A) and another degree of opacity via switching of a portion of the mask such as in the top half **5002** (FIG. **8**B) or an inner annulus **5004** (FIG. **8**C), or the entire mask such as in **5006** (FIG. **8**D) and **5008** (FIG. **8**E). In further embodiments, multiple transition portions are configured to switch between various levels of opacity **5010** (FIG. **8**F).

For example, referring to FIG. **8**F, a mask **5010** having a central aperture **5012** is illustrated. A first annular zone **5014** surrounds the aperture **5012**. A second annular zone **5016** surrounds the first annular zone **5014**. A third annular zone (not illustrated) may surround the second annular zone **5016**. Each of the annular zones may comprise a homogeneous optical transmission characteristic, or may comprise an annular ring of two or more alternating or intermittent sections having distinct absorption characteristics.

In one implementation of the invention, the outer annular ring **5016** comprises a fixed opacity. The inner ring **5014** comprises a transition portion as described elsewhere herein. The opacity of the transition portion may be adjusted between a first opacity that is relatively high, such as substantially equivalent to the opacity of the outer zone **5016**, and a reduced opacity as described elsewhere herein. In effect, the invention enables the provision of a mask **5010** having an aperture **5012** of a first diameter. Adjustment of the opacity of the inner ring **5014** from a relatively high opacity to a relatively low opacity has the effect of increasing the diameter of the central aperture **5012**. This may be desirable for altering the optical characteristics of the mask, or for increasing the visual access to the interior of the eye for diagnostic or therapeutic purposes.

Alternatively, the relationship between the fixed ring and the variable ring may be reversed. Thus, the inner ring **5014** may be provided with a permanent opacity. The outer ring **5016** may be provided with a variable characteristic such that the opacity may be changed between a relatively low level and a relatively high level.

In general, the mask of the present invention may be provided on an intraocular lens, a corneal inlay, or elsewhere along the optical path. It may be provided with at least a first region having a predetermined transmission characteristic, and at least a second region having a controllable variable transmission characteristic.

The variable opacity characteristic can be accomplished by any of a variety of systems in which a change in opacity may be accomplished in response to exposure to an external stimulus. The external stimulus can be ultraviolet, visible or infrared light, heat, a radiofrequency or magnetic field, electrical

current, mechanical vibration (e.g. ultrasound) or other triggering signal that can be applied to the eye. Certain chemical systems which respond to an exposure to light will be described further herein.

As described above, in some embodiments, the mask contains at least one transition portion with photochromic chromophores contained within a polymer matrix. In a preferred embodiment, the photochromic chromophore is spiropyran, although other photochromic chromophores can be used. For example, any photochromic chromophore that undergoes a stereochemical conformational change that can be locked within a polymer matrix can be used. In certain embodiments, the photochromic chromophore or other compound can be any suitable molecule or compound that can be bound into a polymer chain. Further suitable chromophores include, but are not limited to: naphthopyrans, chromenes, fulgides, similar molecules, and mixtures thereof. In other embodiments, dimers of the photochromic chromophore can be used such as, for example, a spiropyran dimer. Desirably, in embodiments, the photochromic chromophore or compound is one that can easily rearrange in the photochromic polymer to alter the transmission state when exposed to suitable irradiation and heat, but which is more difficult to rearrange in the photochromic polymer to alter the transmission state when heat is removed. For example, further details concerning the use of photochromic chromophores within a polymer matrix can be found in U.S. Pat. No. 8,216,765, entitled "REIMAGEABLE AND REUSABLE MEDIUM AND METHOD OF PRODUCING AND USING THE REIMAGEABLE AND REUSABLE MEDIUM," filed Mar. 9, 2009. and which is hereby incorporated by reference in its entirety.

In certain embodiments, the photochromic chromophore concentration within the polymer matrix of the transition portion can be varied to result in a range of switchable opacities. For example, the concentration of photochromic chromophore can be varied to produce a switchable level of opacity within the transition portion having a change in transmission of at least about 5%, at least about 10%, at least about 20%, at least about 30%, at least about 40%, at least 50%, at least about 60%, at least about 70%, or more between the high transmission and low transmission states.

In some embodiments, the photochromic chromophore can be distributed homogenously throughout the transition portions of the mask, resulting in a constant level of opacity across the transition portions of the mask. In certain embodiments, the photochromic chromophore can be distributed heterogeneously throughout the transition portions of the mask, resulting in a non-constant level of opacity across the transition portions of the mask.

In some embodiments, the wavelength of light used to activate the photochromic chromophore to switch from a colorless or high transmission state to an opaque or relatively lower transmission state can be any wavelength of light capable of triggering an absorption transition. In certain embodiments, the wavelength of light used to activate the photochromic chromophore to switch from a colorless state to an opaque state is in the ultraviolet range. In further embodiments, the wavelength of light used to activate the photochromic chromophore is in the infrared range. In additional embodiments, the wavelength of light used to activate the photochromic chromophores is in the visible light range.

In certain embodiments, the photochromic chromophore contained within the transition portion of the mask can be selected so as to allow for exposure to selected events such as illumination and imaging via a camera without activating the photochromic chromophore. For example, the wavelength of light used by the camera to illuminate and image the mask can be of such a different wavelength of light from the activating wavelength of the photochromic chromophore that the light from the camera will not activate the photochromic chromophore. In some embodiments, near infrared light could be used by the camera, while ultraviolet light is used for the photochromic chromophore.

In certain embodiments, the wavelength of energy used by the illuminating and imaging camera is the same as the wavelength of energy used to heat the system. In some embodiments, the wavelength of energy used by the camera is different from the wavelength of energy used to heat the system.

As described above, in some embodiments, the transition portions of the mask contain light-activated photochromic chromophores contained within a polymer matrix with a controlled Tg. In some embodiments, the photochromic chromophore is polymerized directly into the backbone of the polymer used in the polymer matrix. Suitable photochromic chromophores are described above, however, in some embodiments suitable polymers can be formed from first and second monomers. For example, further details concerning the formation of first and second monomers and incorporation of a photochromic chromophore into a polymer matrix can be found in U.S. Pat. No. 8,216,765, entitled "REIMAGEABLE AND REUSABLE MEDIUM AND METHOD OF PRODUCING AND USING THE REIMAGEABLE AND REUSABLE MEDIUM," filed Mar. 9, 2009 and which was incorporated by reference above. FIG. **9** illustrates one embodiment of a synthesis scheme for a photochromic monomer. FIG. **10** illustrates one embodiment of a synthesis scheme for the synthesis of a photochromic polymer from the co-polymerization of a photochromic monomer.

In certain embodiments, the photochromic polymer is optionally dissolved or dispersed in any suitable carrier, such as a solvent, a polymer binder, or the like. Water may be used as a solvent for water soluble photochromic polymers and water-soluble binders such as poly(vinyl alcohol) and poly (acrylic acid). Other suitable solvents include, for example, straight chain aliphatic hydrocarbons, branched chain aliphatic hydrocarbons, and the like, such as where the straight or branched chain aliphatic hydrocarbons have from about 1 to about 30 carbon atoms. For example, a non-polar liquid of the ISOPAR™ series (manufactured by the Exxon Corporation) may be used as the solvent. These hydrocarbon liquids are considered narrow portions of iso-paraffinic hydrocarbon fractions. Other suitable solvent materials include, for example, the NORPAR™ series of liquids, which are compositions of n-paraffins available from Exxon Corporation, the SOLTROL™ series of liquids available from the Phillips Petroleum Company, and the SHELLSOL™ series of liquids available from the Shell Oil Company. Mixtures of one or more solvents, i.e., a solvent system, can also be used, if desired. In addition, more polar solvents can also be used, if desired. Examples of more polar solvents that may be used include halogenated and nonhalogenated solvents, such as tetrahydrofuran, trichloro- and tetrachloroethane, dichloromethane, chloroform, monochlorobenzene, toluene, xylenes, acetone, methanol, ethanol, xylenes, benzene, ethyl acetate, dimethylformamide, cyclohexanone, N-methyl acetamide and the like. The solvent may be composed of one, two, three or more different solvents. When two or more different solvents are present, each solvent may be present in an equal or unequal amount by weight ranging for example from about 5% to 90%, particularly from about 30% to about 50%, based on the weight of all solvents.

In some embodiments, the photochromic polymer can be dispersed in another, non-photochromic polymer binder. Such an additional polymer binder may be desired, for

example, depending on the properties, characteristics, and the like of the photochromic polymer. Of course, it will be understood that an additional polymer binder may not be required in some embodiments, as the photochromic polymer can itself function as a binder material. Suitable examples of polymer binders that can be used include, but are not limited to, polyalkylacrylates like polymethyl methacrylate (PMMA), polycarbonates, polyethylenes, oxidized polyethylene, polypropylene, polyisobutylene, polystyrenes, poly (styrene)-co-(ethylene), polysulfones, polyethersulfones, polyarylsulfones, polyarylethers, polyolefins, polyacrylates, polyvinyl derivatives, cellulose derivatives, polyurethanes, polyamides, polyimides, polyesters, silicone resins, epoxy resins, polyvinyl alcohol, polyacrylic acid, and the like. Copolymer materials such as polystyrene-acrylonitrile, polyethylene-acrylate, vinylidenechloride-vinylchloride, vinylacetate-vinylidene chloride, styrene-alkyd resins are also examples of suitable binder materials. The copolymers may be block, random, or alternating copolymers. In some embodiments, polymethyl methacrylate or a polystyrene is the polymer binder, in terms of their cost and wide availability. The polymer binder, when used, has the role to provide a coating or film forming composition.

Phase change materials can also be used as the polymer binder. Phase change materials are known in the art, and include for example crystalline polyethylenes such as Polywax® 2000, Polywax® 1000, Polywax® 500, and the like from Baker Petrolite, Inc.; oxidized wax such as X-2073 and Mekon wax, from Baker-Hughes Inc.; crystalline polyethylene copolymers such as ethylene/vinyl acetate copolymers, ethylene/vinyl alcohol copolymers, ethylene/acrylic acid copolymers, ethylene/methacrylic acid copolymers, ethylene/carbon monoxide copolymers, polyethylene-b-polyalkylene glycol wherein the alkylene portion can be ethylene, propylene, butylenes, pentylene or the like, and including the polyethylene-b-(polyethylene glycol)s and the like; crystalline polyamides; polyester amides; polyvinyl butyral; polyacrylonitrile; polyvinyl chloride; polyvinyl alcohol hydrolyzed; polyacetal; crystalline poly(ethylene glycol); poly (ethylene oxide); poly(ethylene therephthalate); poly (ethylene succinate); crystalline cellulose polymers; fatty alcohols; ethoxylated fatty alcohols; and the like, and mixtures thereof.

In some embodiments, any suitable polymer that has one or more photochromic molecules or compounds bound to the polymer backbone, can be used. Such photochromic polymers can have the photochromic molecules or compounds covalently bound to the polymer backbone within the polymer chain itself. Such groups can be introduced into the polymer chain, for example, by including the photochromic molecules or compounds during the polymer preparation process, such as in the form of reactive units, monomer units, or the like, or they can be added to an already formed non-photochromic polymer material through known chemical functionalization reactions.

Where multiple photochromic molecules or compounds are present in the polymer chain, the multiple photochromic molecules or compounds can be the same or different. Likewise, the photochromic polymer can include only one type of photochromic polymer, or can include a mixture of two or more different types of photochromic polymer (such as different photochromic polymers having different photochromic molecules or compounds in the polymer chain, or the same or different photochromic molecules or compounds in different polymer chains. Because the photochromic polymer is converted between its colored and colorless states by the use of light and heat, the polymer and photochromic molecules or compounds are desirably selected such that the photochromic polymer has thermal properties that can withstand the elevated temperatures that may be used.

FIG. **11** depicts an embodiment of a suitable incorporation of a photochromic chromophore into a polymer backbone. In this illustrative embodiment, the photochromic chromophore can be between a first and second monomer. Likewise, any suitable non-photochromic polymer materials may be selected for forming the non-photochromic parts of the photochromic polymer. Examples include, but are not limited to, the polymers described above as useful for a polymer binder. For example, in one embodiment, suitable polymers include those that can be formed from first and second monomers. The first monomer may be diacyl chlorides, diacids, its dimethyl esters, or its unhydrous cyclic esters such as oxalyl, malonyl, succinyl, glutaryl, adipoyl, pimeloyl, suberoyl, azelaoyl, sebacoyl, fumaryl, terephthalic, isophthalic, phthalic, and mixtures thereof, wherein the alkyl portion can be a straight, branched or cyclic, saturated or unsaturated, substituted or unsubstituted, from 1 to about 40 carbon atoms, a substituted or unsubstituted aromatic or heteroaromatic group. The second monomer may be bisphenols or diols such as Bis-phenol A, bisphenol B, bisphenol C, bisphenol F, bisphenol M, bisphenol P, bisphenol AP, bisphenol Z, ethylene glycol, propylene glycol, butylene glycol, pentylene glycol, hexylene glycol, heptylene glycoldiethylene glycol, dipropylene glycol, dipropylene glycol, cyclohexyldimethanol, bisphenol A ethoxylate, bisphenol A propoxylate, and mixtures thereof, wherein the alkyl portion can be a straight, branched or cyclic, saturated or unsaturated, substituted or unsubstituted, from 1 to about 40 carbon atoms, an substituted or unsubstituted aromatic or heteroaromatic group.

In certain embodiments, a photochromic polymer containing a photochromic chromophore within a polymer backbone is mixed with a second miscible polymer with side-chain crystallizable side groups such as polyoctadecyl acrylate. For example, further details concerning side-chain crystallizable polymers can be found in U.S. Pat. No. 4,830,855, entitled "TEMPERATURE-CONTROLLED ACTIVE AGENT DISPENSER," filed Nov. 13, 1987 and which is hereby incorporated by reference in its entirety. In certain embodiments, the photochromic chromophore can be polymerized directly into side-chain crystallizable polymers. In certain embodiments, the first and/or second monomers described above can be side-chain crystallizable polymers.

FIG. **12** depicts an embodiment of a side-chain crystallizable polymer, where X is a first monomer unit, Y is a second monomer unit, Z is a backbone atom, S is a spacer unit and C is a crystallizable group. Side-chain crystallizable polymers, sometimes called "comb-like" polymers are well known and available commercially. These polymers are reviewed in J. Poly. Sci.: Macromol. Rev. (1974) 8: 117-253. In some embodiments the molecular weight of C is equal to or greater than twice the sum of the molecular weights of X, Y and Z. These polymers have a heat of fusion (—Ht) of at least about 5 calories/g, preferably at least about 10 calories/g. The backbone of the polymer (defined by X, Y and Z) may be any organic structure (aliphatic or aromatic hydrocarbon, ester, ether, amide, etc.) or an inorganic structure (sulfide, phosphazine, silicone, etc.). The spacer linkages can be any suitable organic or inorganic unit, for example ester, amide, hydrocarbon, phenyl, ether, or ionic salt (for example a carboxyl-alkyl ammonium or sulphonium or phosphonium ion pair or other known ionic salt pair). The side-chain (defined by S and C) may be aliphatic or aromatic or a combination of aliphatic and aromatic, but must be capable of entering into a crystalline state. Common examples are linear aliphatic side-chains of at

least 10 carbon atoms, fluorinated aliphatic side-chains of at least 6 carbons, and p-alkyl styrene side-chains wherein the alkyl is of 8 to 24 carbon atoms.

In some embodiments, the length of the side-chain moiety is usually greater than 5 times the distance between side-chains in the case of acrylates, methacrylates, vinyl esters, acrylamides, methacrylamides, vinyl ethers and alpha olefins. In certain embodiments, a fluoroacrylate alternate copolymer with butadiene as the side-chain can be as little as 2 times the length as the distance between branches. In some embodiments, the side-chain units should make up greater than 50% of the volume of the polymer, preferably greater than 65% of the volume. Co-monomers added to a side-chain polymer usually have an adverse effect on crystallinity. Small amounts of various co-monomers can be tolerated, usually up to 10 to 25 volume percent. In some embodiments, it is desirable to add small amounts of co-monomer, for example cure site monomers such as acrylic acid, glycidal methacrylate, maleic anhydride, amino function monomer and the like. Specific examples of side-chain crystallizable monomers are the acrylate, fluoroacrylate, methacrylate and vinyl ester polymers described in J. Poly. Sci. (1972) 10:50 3347; J. Poly. Sci. (1972) 10: 1657; J. Poly. Sci. (1971) 9:3367; J. Poly. Sci. (1971) 9: 3349; J. Poly. Sci. (1971) 9:1835; J.A.C.S. (1954) 76: 6280; J. Poly. Sci. (1969) 7: 3053; Polymer J. (1985) 17: 991. corresponding acrylamides, substituted acrylamide and maleimide polymers (J. Poly. Sci., Poly. Physics Ed. (1980) 18: 2197; polyalphaolefin polymers such as those described in J. Poly. Sci.: Macromol. Rev. (1974) 8: 117-253 and Macromolecules (1980) 13: 12, polyalkylvinylethers, polyalkylethylene oxides such as those described in Macromolecules (1980) 13: 15, alkylphosphazene polymers, polyamino acids such as those described in Poly. Sci. USSR (1979) 21: 241, Macromolecules (1985) 18: 2141, polyisocyanates such as those described in Macromolecules (1979) 12: 94. polyurethanes made by reacting amine- or alcohol-containing monomers with long chain alkyl isocyanates, polyesters and poly ethers. Polysiloxanes and polysilanes such as those described in Macromolecules (1986) 19: 611 and p-alkylstyrene polymers such as those described in J.A.C.S. (1953) 75: 3326 and J. Poly. Sci. (1962) 60: 19.

In certain embodiments, the photochromic chromophore can be incorporated into a polyester polycondensate. For example, further details concerning this type of incorporation can be found in U.S. Pat. No. 3,918,972, entitled "IMAGING PROCESS UTILIZING A POLYESTER POLYCONDENSATE CONTAINING SPIROPYRAN PHOTOCHROMIC GROUPS" filed Aug. 13, 1973 and hereby incorporated by reference in its entirety. Further details concerning additional photochromic polycondensates can be found in U.S. Pat. No. 4,026,869 entitled PHOTOCHROMIC POLYCONDENSATES, filed Jul. 21, 1975 and hereby incorporated by reference in its entirety.

In some embodiments, linear polycondensates of the polyester type are provided characterized in that they contain spiropyran photochromic groups as an integral part of the main polymer chain. In certain embodiments, they can be prepared by polycondensation of Bisphenol-A and a photochromic compound carrying a hydroxyalkyl group on either side of the photochromic moiety, with a dicarboxylic acid of the saturated dicarboxylic acid series, preferably with succinic acid, adipic acid, glutaric acid and pimelic acid. In this process the dicarboxylic acid in the form of a diacid dichloride is dissolved in an organic liquid, such as methylene chloride, dichloroethane, tetrachloroethane, benzene or toluene, which is also a solvent for the copolycondensate to be formed. The bisphenol is dissolved in another liquid, which is immiscible with the above organic liquid. Preferably water is used as a solvent for the bisphenol and an equivalent amount of a metal hydroxide, such as sodium hydroxide or potassium hydroxide is added to the water in order to form immediately the corresponding diphenolate. The reaction speed is greatly increased by using quaternary ammonium compounds as catalysts. The two solutions are mixed and stirred vigorously at the reaction temperature, whereby the copolyester is formed in solution. In the same way the photochromic copoly-condensates of the invention are formed. In some embodiments, a photochromic compound carrying on either side of the photochromic moiety an hydroxyalkylgroup is made to react with an excess of the diacid dichloride e.g. of succinic acid, adipic acid, glutaric acid, or pimelic acid, and the photochrome-bis-acid chloride formed in this way is made to react in a two-phase reaction mixture with a diphenolate of bisphenol-A. Suitable photochromic compounds carrying two hydroxyalkyl groups on either side of the photochromic moiety are compounds, containing spiropyran groups.

In certain embodiments, the photochromic chromophore is directly polymerized into a polymer backbone as described above and mixed with the miscible polymer combination described above. In some embodiments, the photochromic dye is directly polymerized into the polymer backbone of a polymer that also has side chain crystallizable side groups such as described above. In certain embodiments, the photochromic oligomers or monomers described above and in U.S. Pat. No. 8,216,765 can be mixed with the aforementioned miscible combination of polymers. In some embodiments, a dimer of any of the aforementioned photochromic chromophores can be mixed with any of the aforementioned polymers.

In further embodiments, the Tg of the polymer matrix can be between 30°-150° C. For example, the Tg can be at least about 30° C., about 35° C., about 40° C., about 45° C., about 50° C., about 55° C., about 60° C., about 65° C., about 70° C., about 75° C., about 80° C., about 85° C., about 90° C., about 95° C., about 100° C., about 105° C., about 110° C., about 115° C., about 120° C., about 125° C., about 130° C., about 135° C., about 140° C., about 145° C., or about 150° C.

The Tg of the polymer matrix can be varied by changing the chemical properties of the polymers comprising the polymer matrix. In some embodiments, the Tg of the polymer matrix can be modified by varying the chain length of the monomer used in polymerization. In further embodiments, the Tg is controlled by varying the chain length of the side groups that branch from the polymer backbone. In other embodiments, the Tg of the polymer matrix can be adjusted by varying the spacing between the side-chains. In certain embodiments, the Tg of the polymer is controlled by varying the cross-link density of the polymer. In other embodiments, the Tg of the polymer can be controlled by varying the molecular weight of the polymer. Any of the aforementioned polymer properties can be adjusted together or separately to tune the Tg of the polymer matrix.

As described previously, in some embodiments, heat can be used to cause the polymer matrix to undergo a glass transition. In certain embodiments, heat is provided to the polymer matrix via focused radiant energy from outside the eye. For example, this focused radiant energy can be a laser. In some embodiments, ultrasonic energy can be applied to the mask to heat it. In some embodiments, heat or other initiator is applied to the transition portions, or to one of multiple transition portions of the mask.

In some embodiments, an axicon lens can be used to focus a circular beam of radiant energy into the eye and onto a mask

to heat an annular area of the mask inside the eye. In certain embodiments, the annular pattern created by the axicon lens can be focused further before entering the eye to create a confocal focusing of the annular pattern to bring it to a smaller, higher energy density annular region of focus inside the eye on the mask. In certain embodiments, a biconvex toric lens could be used to achieve the confocal focusing of the annular pattern output from the axicon lens element to focus it confocally into the eye. In some embodiments, other optical configurations instead of an axicon lens can be used to provide a confocally focused annular beam of energy into the eye.

In some embodiments, focusing of the radiant energy into the eye and onto the mask would be completed with simultaneous microscope viewing for better control and monitoring of the procedure inside the eye. This arrangement is advantageous, as the focus of the radiation area on the mask and the change of the photochromic chromophores in this area could be directly observed.

While the above detailed description has shown, described, and pointed out novel features as applied to various embodiments, it will be understood that various omissions, substitutions, and changes in the form and details of the device or process illustrated can be made without departing from the spirit of the disclosure. As will be recognized, certain embodiments of the inventions described herein can be embodied within a form that does not provide all of the features and benefits set forth herein, as some features can be used or practiced separately from others. The scope of the inventions is indicated by the appended claims rather than by the foregoing description. All changes which come within the meaning and range of equivalency of the claims are to be embraced within their scope.

What is claimed is:

1. An ophthalmic device comprising:

a mask configured to transmit substantially all visible light along an optical axis of the eye;

the mask further comprising a transition portion configured to switch between a first degree of opacity and a second degree of opacity in response to application of an external stimuli;

wherein the transition portion is configured to remain locked into the second degree of opacity after removal of the external stimuli until another application of the external stimuli, the transition portion then returning to the first degree of opacity; and

wherein the transition portion comprises a photochromic chromophore within a polymer matrix.

2. The ophthalmic device of claim **1**, wherein the mask further comprises an aperture configured to transmit substantially all visible light along the optical axis of the eye.

3. The ophthalmic device of claim **1**, wherein the mask further comprises a plurality of holes extending at least partially between an anterior surface of the mask and a posterior surface of the mask.

4. The ophthalmic device of claim **1**, further comprising an intraocular lens coupled with the mask.

5. The ophthalmic device of claim **1**, wherein the second degree of opacity allows transmission of substantially all visible light through the transition portion of the mask.

6. The ophthalmic device of claim **1**, wherein the first degree of opacity prevents transmission of substantially all visible light through the transition portion of the mask.

7. The ophthalmic device of claim **1**, wherein the transition portion of the mask comprises at least 50% of the total mask.

8. The ophthalmic device of claim **1**, wherein the photochromic chromophore is spiropyran.

9. The ophthalmic device of claim **1**, wherein the transition portion is configured to switch between a first degree of opacity and a second degree of opacity via application of both light and heat.

10. The ophthalmic device of claim **1**, wherein the polymer matrix has a glass transition temperature of between 30-150° C.

11. The ophthalmic device of claim **1**, wherein the external stimuli is chosen from the group consisting of light, heat, and electrical current.

12. The ophthalmic device of claim **1**, wherein the external stimuli comprises heat provided by a laser.

13. The ophthalmic device of claim **1**, wherein the external stimuli comprises a combination of light and heat.

14. The ophthalmic device of claim **1**, wherein the glass transition temperature of the polymer matrix is approximately 50° C.

15. The ophthalmic device of claim **1**, wherein the polymer matrix comprises a side-chain crystallizable polymer.

16. The ophthalmic device of claim **1**, wherein the mask is configured to switch between the first degree of opacity, the second degree of opacity, and a third degree of opacity in response to an external stimuli.

17. The ophthalmic device of claim **1**, wherein the transition portion is further configured to remain locked into the first degree of opacity until application of the external stimuli.

18. The ophthalmic device of claim **1**, wherein the polymer matrix comprises polymethyl methacrylate.

19. An intraocular mask, comprising:

a photochromic chromophore within a polymer matrix, the photochromic chromophore configured to rotate between a first state wherein the intraocular mask comprises a first degree of opacity and a second state wherein the intraocular mask comprises a second degree of opacity, the photochromic chromophore configured to rotate only when the polymer matrix has passed through a glass transition from a brittle state into a molten state in response to application of an external stimuli, the polymer matrix configured to return to the brittle state upon removal of the external stimuli and remain locked in the brittle state until another application of the external stimuli.

20. The intraocular mask of claim **19**, wherein the photochromic chromophore is substantially opaque while in the first state.

21. The intraocular mask of claim **20**, wherein the photochromic chromophore is substantially colorless while in the second state.

* * * * *

UNITED STATES PATENT AND TRADEMARK OFFICE

CERTIFICATE OF CORRECTION

PATENT NO. : 9,204,962 B2
APPLICATION NO. : 13/802340
DATED : December 8, 2015
INVENTOR(S) : Thomas A. Silvestrini

It is certified that error appears in the above-identified patent and that said Letters Patent is hereby corrected as shown below:

On the title page

In column 2 (page 1, item 56) at line 16, Under Other Publications, change "Accomodation" to --Accommodation--.

In column 2 (page 7, item 56) at line 44, Under Other Publications, change "Opthalmology" to --Ophthalmology--.

In column 2 (page 7, item 56) at line 45, Under Other Publications, change "Accomodation" to --Accommodation--.

In column 1 (page 8, item 56) at line 29, Under Other Publications, change "accomodation." to --accommodation.--.

In column 1 (page 8, item 56) at line 52, Under Other Publications, change "Hydrophopic" to --Hydrophobic--.

In column 1 (page 8, item 56) at line 53, Under Other Publications, change "Light-Absorving" to --Light-Absorbing--.

In column 1 (page 8, item 56) at line 60, Under Other Publications, change "Hydrophopic" to --Hydrophobic--.

In column 1 (page 8, item 56) at line 60, Under Other Publications, change "Absorving" to --Absorbing--.

In column 2 (page 8, item 56) at line 27, Under Other Publications, change "Opthalmology," to --Ophthalmology,--.

In column 2 (page 8, item 56) at line 59, Under Other Publications, change "Opthalmology," to --Ophthalmology,--.

In column 1 (page 9, item 56) at line 34, Under Other Publications, change "flouride" to --fluoride--.

Signed and Sealed this
Fifth Day of July, 2016

Michelle K. Lee

Michelle K. Lee
Director of the United States Patent and Trademark Office

In column 1 (page 9, item 56) at line 60, Under Other Publications, change "Opthalmology," to --Ophthalmology,--.

In column 2 (page 9, item 56) at line 5, Under Other Publications, change "Opthalmology," to --Ophthalmology,--.

In column 2 (page 9, item 56) at line 48, Under Other Publications, change "Manfacturing" to --Manufacturing--.

In column 2 (page 9, item 56) at line 56, Under Other Publications, change "prosepective" to --prospective--.

In column 1 (page 10, item 56) at line 4, Under Other Publications, change "Opthalmology," to --Ophthalmology,--.

In column 2 (page 10, item 56) at line 7, Under Other Publications, change "Keratoplosty:" to --Keratoplasty:--.

In column 2 (page 10, item 56) at lines 7-8, Under Other Publications, change "Cyropreservation,"" to --Cryopreservation,"--.

In the specification

In column 4 at line 54, Change "2034 a,b" to --2034a,b--.

In column 4 at line 55, Change "co-polymers," to --copolymers,--.

In column 11 at line 30, Change "2009." to --2009,--.

In column 13 at line 40, Change "therephthalate);" to --terephthalate);--.

In column 14 at line 15, Change "unhydrous" to --anhydrous--.

In column 14 at line 55, Change "(—Ht)" to --(~Ht)--.